ATESTEO
Excellence in drivetrain testing

Data sheet

FxiS / FxeS

Instrumentation Devices Srl
Via Acquanera 29 - 22100 COMO (Italy)
ph +39 031 525 391- fax +39 031 507 984
info@instrumentation.it - www.instrumentation.it

Technical data

Type	-	F0iS-SV	F0eS-SV
Accuracy class	%	≤±0.05	
Rated torque (Md_n)	Nm	200 400 500	200 400 500
Torque measuring system			
Technology	-	Rotating	
Rated torque (Md_n) #1	Nm	200 400 500	200 400 500
Rated torque short measurement range (optional, minimum) (Md_{ns}) #2	Nm	70 140 170	70 140 170
Accuracy class extended (for Md_n)	%	N/A	
Outputs	-	Frequency (RS422), Voltage, Current, CAN bus, Alert	
Test signal	-	see test report	
Mechanical dimensions #3			
Outer diameter of rotor #4	mm	95.50	
Lengths (Rotor, without centering)	mm	54	
Pitch circle diameter #5	mm	75.0	
Speeds and speed measuring systems			
Speed detection (integrated)	-	without	
Speed detection (optional)	-	optical	
Maximum Speed without speed detection system	rpm	20,000	
Optional increased speed	rpm	30,000	
Maximum speed with magnetic speed encoder	rpm	N/A	
Maximum speed with optical speed encoder #6	rpm	up to 20,000	
Maximum speed with inductive speed encoder	rpm	N/A	
Torque accuracy class per output type (related to Md_n)			
Frequency output	%	≤±0.05	
CAN output	%	≤±0.05	
Voltage output	%	≤±0.10	
Current output	%	≤±0.10	
Frequency output (option higher accuracy)	%	N/A	
CAN (option higher accuracy)	%	N/A	

©2025, ATESTEO GmbH & Co. KG, This product data sheet was created on 10.22.2025.

The information contained in the product data sheet corresponds to the status quo at the time the document was created. ATESTEO continually further develops its products and reserves the right to make changes to the technical data. ATESTEO does not accept any liability for consequential losses arising from the use of this product data sheet or the information contained therein.

Technical data

Type	-	F0iS-SV	F0eS-SV
Accuracy class	%	≤±0.05	
Rated torque (Md_n)	Nm	200 400 500	200 400 500

Linearity deviation including hysteresis related to Md_n #7		
Frequency, 0%...30%	%	≤±0.010
Frequency, 30%...60%	%	≤±0.020
Frequency, 60%...100%	%	≤±0.030
CAN, 0%...30%	%	≤±0.010
CAN, 30%...60%	%	≤±0.020
CAN, 60%...100%	%	≤±0.030
Voltage output	%	≤±0.05
Current output	%	≤±0.05
Rel. standard deviation of the reproducibility according to DIN 1319, by reference to variation of the output signal (rel. to Md_n)		
Frequency output	%	≤±0.03
CAN output	%	≤±0.03
Voltage output	%	≤±0.05
Current output	%	≤±0.05
Temperature influence per 10K in the nominal temperature range on the output signal related to the actual value of signal span (rel. to Md_n)		
Frequency output	%	≤±0.05
CAN output	%	≤±0.05
Voltage output	%	≤±0.10
Current output	%	≤±0.10
Temperature influence per 10K in the nominal temperature range on the zero signal (rel. to Md_n)		
Frequency output	%	≤±0.05
CAN output	%	≤±0.05
Voltage output	%	≤±0.10
Current output	%	≤±0.10
Long-term drift over 48h at reference temperature		
Voltage output	mV	<1.0
Current output	µA	<0.80

©2025, ATESTEO GmbH & Co. KG, This product data sheet was created on 10.22.2025.

The information contained in the product data sheet corresponds to the status quo at the time the document was created. ATESTEO continually further develops its products and reserves the right to make changes to the technical data. ATESTEO does not accept any liability for consequential losses arising from the use of this product data sheet or the information contained therein.

Technical data

Type	-	F0iS-SV	F0eS-SV
Accuracy class	%	≤±0.05	
Rated torque (Md_n)	Nm	200 400 500	200 400 500

Nominal sensitivity (range between zero torque and rated torque)		
Frequency output	kHz	20
Voltage output	V	5.0 / 10.0 / 2.5 / 5.0
Current output	mA	8 / 10
Output signal at zero torque		
Frequency output	kHz	60
Voltage output	V	0.0 / 0.0 / 2.5 / 5.0
Current output	mA	12 / 10
Nominal output signal		
Frequency output at positive nominal value	kHz	80
Frequency output at negative nominal value	kHz	40
Voltage output at positive nominal value	V	5 / 10 / 5 / 10
Voltage output at negative nominal value	V	-5 / -10 / 0 / 0
Current output at positive nominal value	mA	20 / 20
Current output at negative nominal value	mA	4 / 0
Max. modulation range		
Frequency output	kHz	30...90
Voltage output	V	-10.5...10.5
Current output	mA	0...24
Group delay time (main TCU)		
Frequency output	µs	10
Voltage output	µs	3,000
CAN bus	µs	1,000

©2025, ATESTEO GmbH & Co. KG, This product data sheet was created on 10.22.2025.

The information contained in the product data sheet corresponds to the status quo at the time the document was created. ATESTEO continually further develops its products and reserves the right to make changes to the technical data. ATESTEO does not accept any liability for consequential losses arising from the use of this product data sheet or the information contained therein.

Technical data

Type	-	F0iS-SV	F0eS-SV
Accuracy class	%	≤±0.05	
Rated torque (Md_n)	Nm	200 400 500	200 400 500

Speed measuring system	Inductive (track at rotor)	
Pulse per rev (PPR)	ppr.	N/A
Maximum speeds (related to PPR)	rpm	N/A
Max. output frequency (RS422)	kHz	N/A
Minimum speed for sufficient pulse stability	rpm	N/A
Speed measuring system	**Magneto resistive (2 tracks approx. 90 degree phase shifted)**	
Pulses per rev (PPR)	ppr.	N/A
Maximum speeds (related to PPR)	rpm	N/A
Max. output frequency (RS422)	kHz	N/A
Minimum speed for sufficient pulse stability	rpm	N/A
Nominal clearance (sensor - pole ring)	mm	N/A
Working airgap (sensor - pole ring)	mm	N/A
Nominal axial displacement (rotor - stator) #8	mm	N/A
Tolerance to nominal axial displacement (rotor - stator)	mm	N/A
Speed measuring system	**Optical**	
Pulses per rev (PPR)	ppr.	240 / 360 / 400
Maximum speeds (related to PPR)	rpm	20,000 / 16,000 / 15,000
Max. output frequency (RS422)	kHz	80 / 96 / 100
Minimum speed for sufficient pulse stability	rpm	>1.3 / >0.8 / >0.8
Nominal radial displacement (rotor - stator)	mm	1.5
Tolerated radial displacement (rotor - stator) #8	mm	1.4...1.6
Nominal axial displacement (rotor - stator) #8	mm	4.0
Tolerance to nominal axial displacement (rotor - stator)	mm	+0.5/-0.3

©2025, ATESTEO GmbH & Co. KG, This product data sheet was created on 10.22.2025.

The information contained in the product data sheet corresponds to the status quo at the time the document was created. ATESTEO continually further develops its products and reserves the right to make changes to the technical data. ATESTEO does not accept any liability for consequential losses arising from the use of this product data sheet or the information contained therein.

Technical data

Type	-	F0iS-SV	F0eS-SV
Accuracy class	%	≤±0.05	
Rated torque (Md_n)	Nm	200 400 500	200 400 500

Angular measuring system		
Requirement	-	N/A
Pulses per rev	ppr.	N/A
Resolution	°	N/A
Output signals	-	N/A
Measurement ranges	°	N/A

©2025, ATESTEO GmbH & Co. KG, This product data sheet was created on 10.22.2025.

The information contained in the product data sheet corresponds to the status quo at the time the document was created. ATESTEO continually further develops its products and reserves the right to make changes to the technical data. ATESTEO does not accept any liability for consequential losses arising from the use of this product data sheet or the information contained therein.

Technical data

Type	-	F0iS-SV	F0eS-SV
Accuracy class	%	≤±0.05	
Rated torque (Md_n)	Nm	200 400 500	200 400 500
Temperature ranges			
Nominal temperature range *(Rotor)*	°C	0...80	
Operating temperature range *(Rotor)* #9	°C	-20...85	
Storage temperature range *(Rotor)*	°C	-30...85	
Nominal temperature range *(Stator)*	°C	0...70	0...80
Operating temperature range *(Stator)* #10	°C	-20...70	-20...85
Storage temperature range *(Stator)*	°C	-30...85	
Nominal temperature range *(TCU)*	°C	N/A	0...70
Operating temperature range *(TCU)*	°C	N/A	-20...70
Storage temperature range *(TCU)*	°C	N/A	-30...85
Mechanical shock (EN 60068-2-27)			
Quantity	-	1,000	
Duration	ms	3	
Acceleration	m/s²	650	
Vibration load (EN 60068-2-6)			
Frequency	Hz	10...2,000	
Duration	min.	150	
Acceleration	m/s²	200	
Load limits #11			
Limit torque, related to Md_n	%	500 325 325	500 325 325
Breaking torque approx., related to Md_n	%	1,000 650 650	1,000 650 650
Axial limit force	kN	20.00 23.90 27.00	20.00 23.90 27.00
Lateral limit force	N	4,260.00 5,530.00 6,590.00	4,260.00 5,530.00 6,590.00
Bending limit torque	Nm	130.00 162.50 190.50	130.00 162.50 190.50

©2025, ATESTEO GmbH & Co. KG, This product data sheet was created on 10.22.2025.

The information contained in the product data sheet corresponds to the status quo at the time the document was created. ATESTEO continually further develops its products and reserves the right to make changes to the technical data. ATESTEO does not accept any liability for consequential losses arising from the use of this product data sheet or the information contained therein.

Technical data

Type	-	F0iS-SV	F0eS-SV
Accuracy class	%	≤±0.05	
Rated torque (Md_n)	Nm	200 400 500	200 400 500

Mechanical values			
Torsional stiffness	kNm/rad	380 493 586	380 493 586
Angle of twist at Md_n	°	0.030 0.046 0.049	0.030 0.046 0.049
Axial stiffness	kN/mm	803 959 1,082	803 959 1,082
Radial stiffness	kN/mm	266 345 412	266 345 412
Bending stiffness	kNm/°	3.70 4.60 5.40	3.70 4.60 5.40
Deflection at axial limit force	mm	<0.03	
Additional radial deviation at lateral limit force	mm	<0.02	
Parallel deviation at bending limit torque	mm	<0.06	
Inherent frequency	Hz	3,300 3,700 4,100	3,300 3,700 4,100
Balance quality-level (DIN ISO 1949)	-	G2.5	
Inertia of rotor	kgm²	0.0013	
Max. limits for relative shaft vibration (peak to peak) #12	µm	$S_{(p-p)} = \frac{9000}{\sqrt{n}}$	

©2025, ATESTEO GmbH & Co. KG, This product data sheet was created on 10.22.2025.

The information contained in the product data sheet corresponds to the status quo at the time the document was created. ATESTEO continually further develops its products and reserves the right to make changes to the technical data. ATESTEO does not accept any liability for consequential losses arising from the use of this product data sheet or the information contained therein.

Technical data

Type	-	F0iS-SV	F0eS-SV
Accuracy class	%	≤±0.05	
Rated torque (Md_n)	Nm	200 400 500	200 400 500
Weight approx.			
Rotor #13	kg	1.1	
Stator (without speed encoder) #13	kg	2.10	1.10
Mounting distances (without optional speed detection system)			
Nominal radial displacement (rotor - stator)	mm	2.1	
Tolerance to nominal radial displacement (rotor - stator)	mm	≤±0.1	
Nominal axial displacement (rotor - stator) #8	mm	4	
Tolerance to nominal axial displacement (rotor - stator)	mm	≤±0.5	
Flatness and concentricity tolerances rotor			
Circular run-out-axial tolerance #14	mm	0.01	
Circular run-out-radial tolerance #14	mm	0.01	
Power supply			
Nominal supply	V	(DC) 24	
Supply range #15	V	(DC) 23...25	
Max. current consumption in measuring mode	A	<0.70	
Max. current consumption in start-up mode	A	<2	
Nominal power consumption	W	<17	
Load resistance			
Frequency output	-	RS422	
Voltage output	kOhm	≥5	
Dynamic			
Frequency output	kHz	≤7	
Voltage output	kHz	≤1	
Current output	kHz	≤1	
CAN output conversation rate	1/s	≤1,000	

©2025, ATESTEO GmbH & Co. KG, This product data sheet was created on 10.22.2025.

The information contained in the product data sheet corresponds to the status quo at the time the document was created. ATESTEO continually further develops its products and reserves the right to make changes to the technical data. ATESTEO does not accept any liability for consequential losses arising from the use of this product data sheet or the information contained therein.

Technical data

Type	-	F0iS-SV	F0eS-SV
Accuracy class	%	≤±0.05	
Rated torque (Md_n)	Nm	200 400 500	200 400 500

Miscellaneous			
Protection class *(Rotor)*	-	IP54	
Protection class *(Stator)*	-	IP54	
Protection class (rotor, extended)	-	On request	
Protection class (stator, extended)	-	On request	
Pitch circle screw information	-	4 * M10 (10.9)	
CAN bus type	-	2B	
Configuration interface	-	RS232	
Central hole	mm	N/A	
Material	-	Steel	
Measuring range (related to Md_n)	%	120	
Compatible evaluation units (TCU)	-	Integrated	TCU2
Stator type	-	iS	eS
Sales information			
Article number	-	10003315	10004186
U.S. FCC certificate	-	Not required	

©2025, ATESTEO GmbH & Co. KG, This product data sheet was created on 10.22.2025.

The information contained in the product data sheet corresponds to the status quo at the time the document was created. ATESTEO continually further develops its products and reserves the right to make changes to the technical data. ATESTEO does not accept any liability for consequential losses arising from the use of this product data sheet or the information contained therein.

Remarks and information

Link no.	Topic	Remark
#1	Nominal torque	Based on customer requests, the measurement systems can optionally be optimized for not listed nominal torque values (intermediate ranges possible).
#2	Second torque range	The written second nominal torque value (Md_{ns}) is the smallest possible. Greater second torque ranges can be chosen on demand. Mechanical values and load limits vary between single and dual range torque meters. A data sheet for dual range torque meters with specific values can be requested.
#3	Dimensions	Mechanical dimensions are without engagement. Use the drawings and step files as master for your constructions.
#4	Details in the drawings	Value can vary by optional components. Please find details to this attribute in the integrated drawings.
#5	Pitch circle diameter	The pitch circle diameter is identically at input and output side for most systems. More information is given in the drawings of a product.
#6	Speed detection max speed	The maximum allowed speed of speed detection systems is depending on the number of pulses per rotation (PPR). High PPRs can reduce the maximum allowed speed. Details are shown within this data sheet in the description of the speed detection system.
#7	Linearity	Values of Linearity deviation incl. Hysteresis can only be reached if positive and negative sensitivity values are used.
#8	Reference planes	Please check the drawings for information about the reference planes of this attribute.
#9	Temperature range (rotor)	No condensation allowed.
#10	Temperature range (stator)	No condensation allowed. Temperature related to housing ground point.

©2025, ATESTEO GmbH & Co. KG, This product data sheet was created on 10.22.2025.

The information contained in the product data sheet corresponds to the status quo at the time the document was created. ATESTEO continually further develops its products and reserves the right to make changes to the technical data. ATESTEO does not accept any liability for consequential losses arising from the use of this product data sheet or the information contained therein.

Remarks and information

Link no.	Topic	Remark
#11	Load limits	The given values are only valid if no other load occurs at the same time. If the loads in sum are 100%, the max. error will be 0.3% of the nominal torque. Limit and break torque are lower if other loads are applied (such as lateral forces).
#12	Vibration limits	Vibration limits are not an influence to the machine. They reflect the allowed effect onto the rotor (ISO 7919-3). Parameter "n" is given in "r/min.".
#13	Weights	Weights are related to components without options like speed detection system. Please contact us for exact weight information of options.
#14	Flatness and concentricity tolerances	The parameters of "Flatness and concentricity tolerances rotor" are manufacturing tolerances.
#15	Supply voltage	The supply voltage range must be given at measurement system side. Long wires can reduce the voltage level from power supply to measurement system.

©2025, ATESTEO GmbH & Co. KG, This product data sheet was created on 10.22.2025.

The information contained in the product data sheet corresponds to the status quo at the time the document was created. ATESTEO continually further develops its products and reserves the right to make changes to the technical data. ATESTEO does not accept any liability for consequential losses arising from the use of this product data sheet or the information contained therein.

Drawing

iS

Rotor & stator with integrated evaluation unit (TCU)
Rotor & Stator mit integrierter Auswerteeinheit (TCU)

eS

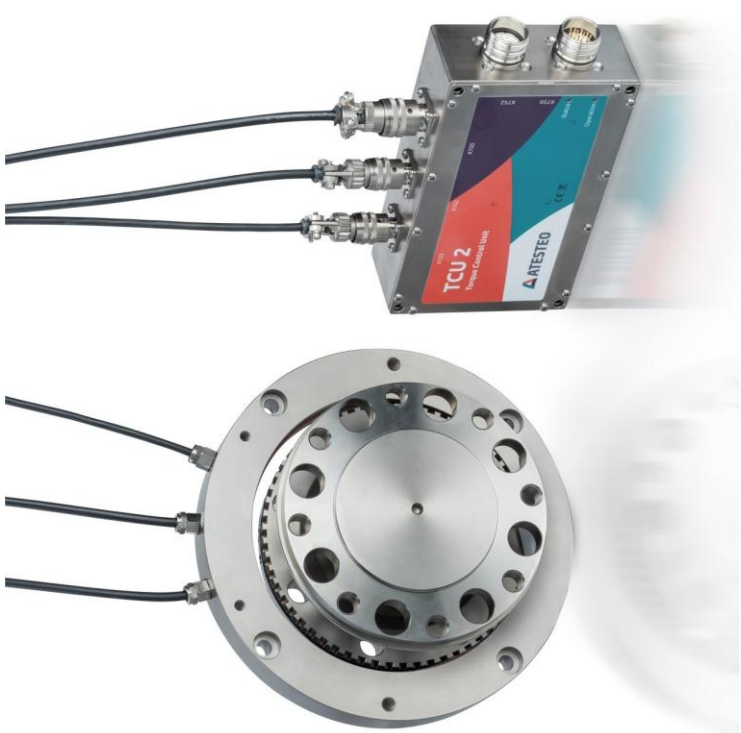

Rotor, ring stator & external evaluation unit (TCU)
Rotor, Ringstator & abgesetzte Auswerteeinheit (TCU)

©2025, ATESTEO GmbH & Co. KG, This product data sheet was created on 10.22.2025.

The information contained in the product data sheet corresponds to the status quo at the time the document was created. ATESTEO continually further develops its products and reserves the right to make changes to the technical data. ATESTEO does not accept any liability for consequential losses arising from the use of this product data sheet or the information contained therein.

F0iS-SV (<=500 Nm) System

Drawing

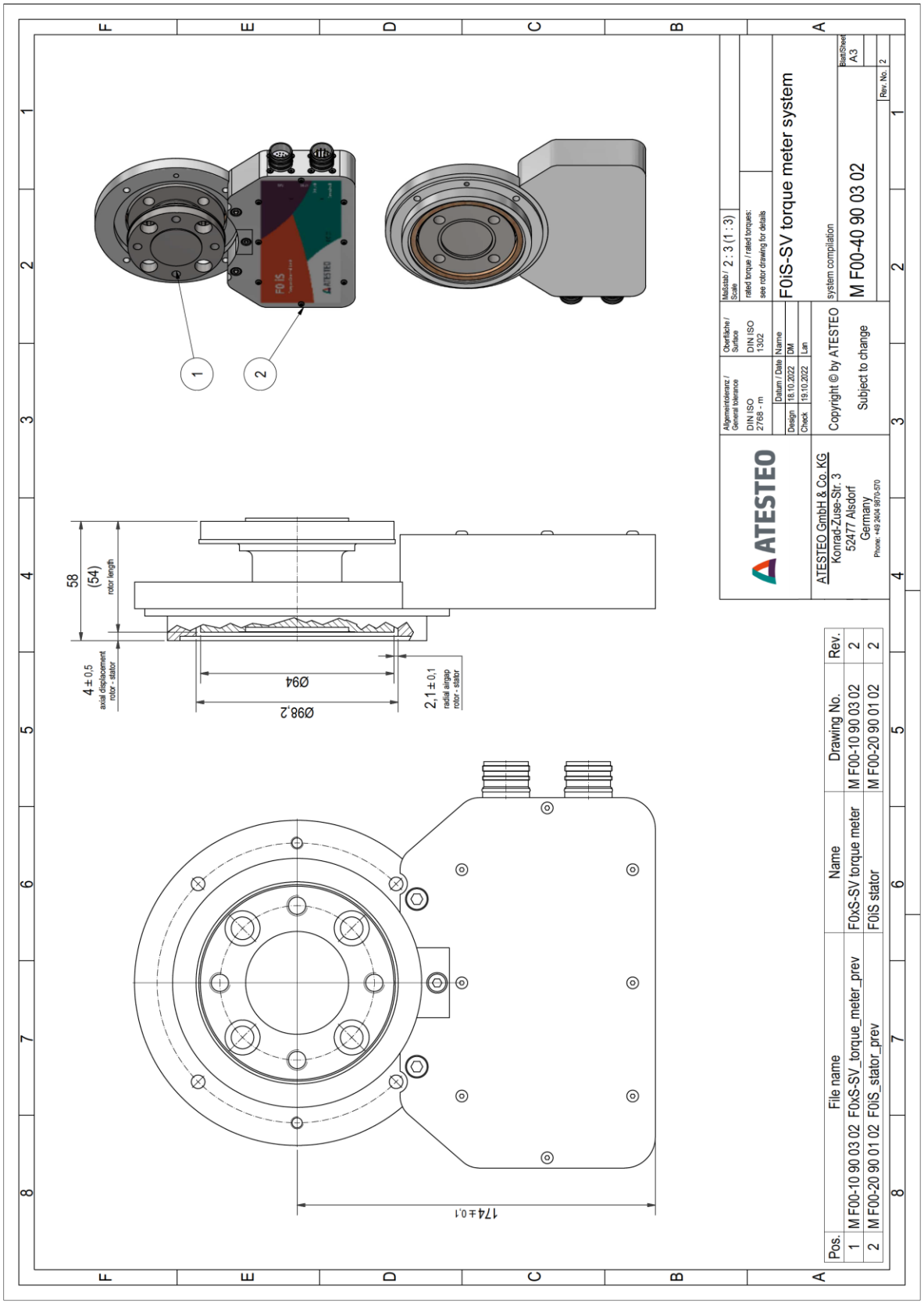

©2025, ATESTEO GmbH & Co. KG, This product data sheet was created on 10.22.2025.

The information contained in the product data sheet corresponds to the status quo at the time the document was created. ATESTEO continually further develops its products and reserves the right to make changes to the technical data. ATESTEO does not accept any liability for consequential losses arising from the use of this product data sheet or the information contained therein.

F0iS-SV (<=500 Nm) Rotor

Drawing

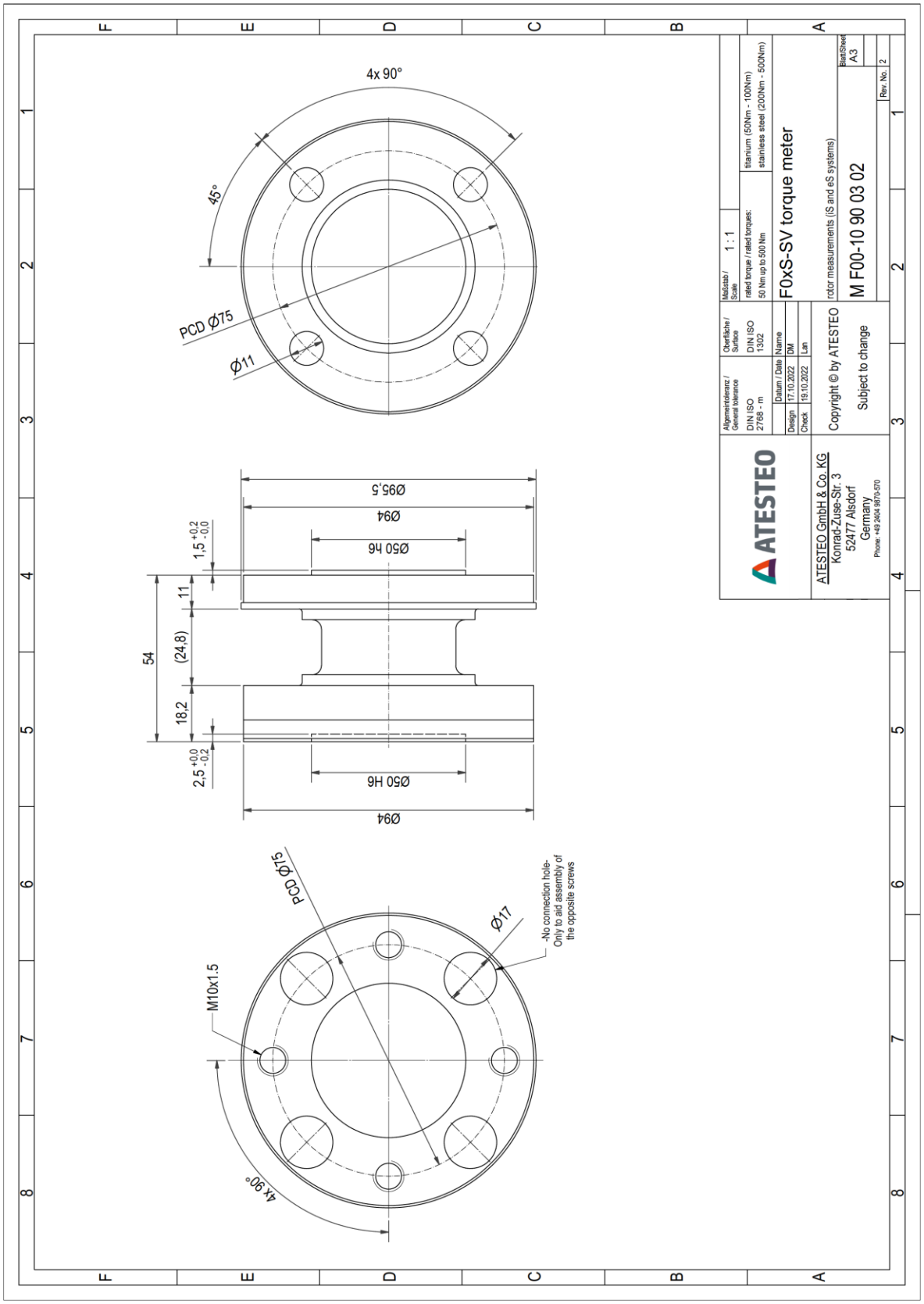

©2025, ATESTEO GmbH & Co. KG, This product data sheet was created on 10.22.2025.

The information contained in the product data sheet corresponds to the status quo at the time the document was created. ATESTEO continually further develops its products and reserves the right to make changes to the technical data. ATESTEO does not accept any liability for consequential losses arising from the use of this product data sheet or the information contained therein.

Drawing

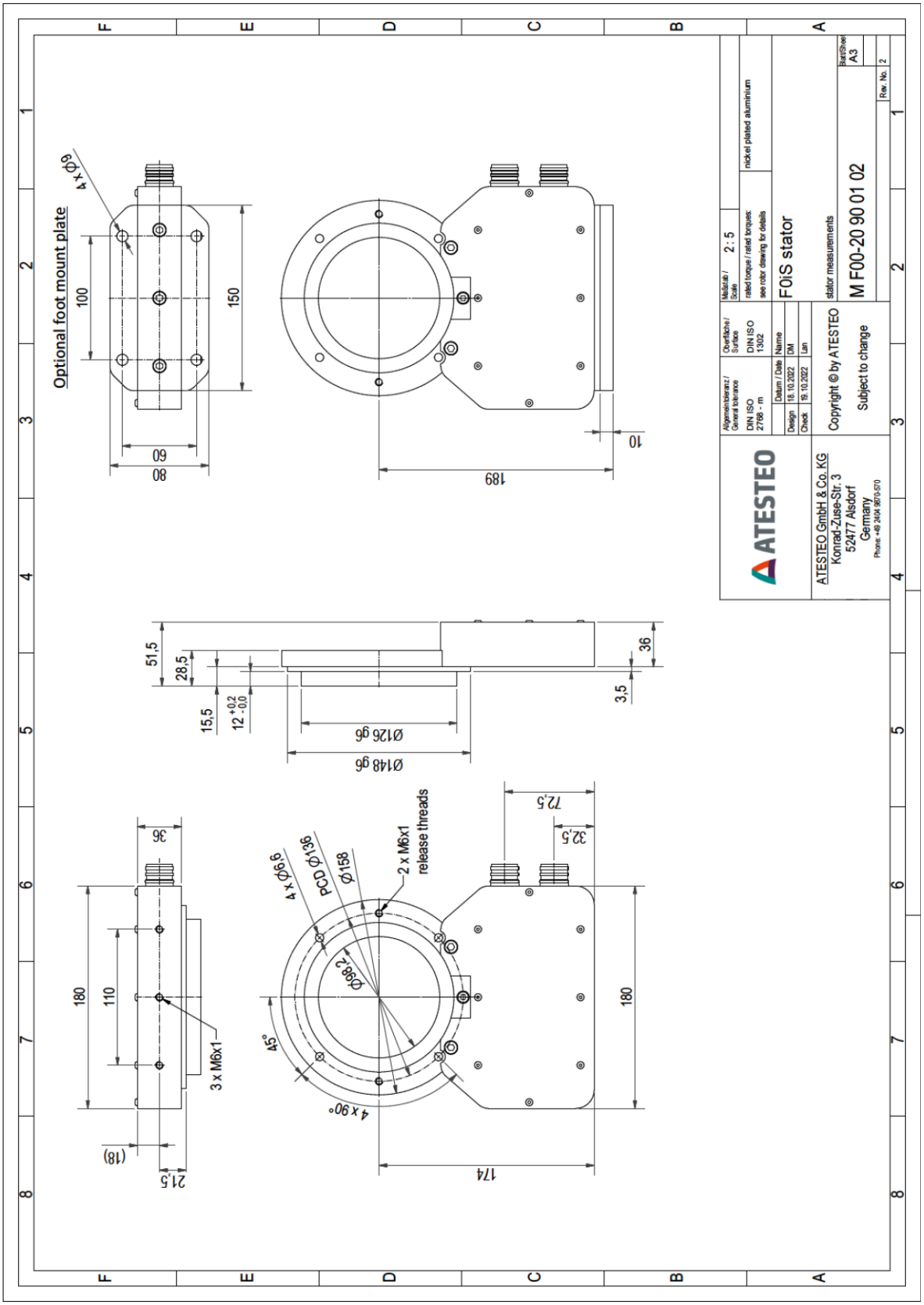

©2025, ATESTEO GmbH & Co. KG, This product data sheet was created on 10.22.2025.

The information contained in the product data sheet corresponds to the status quo at the time the document was created. ATESTEO continually further develops its products and reserves the right to make changes to the technical data. ATESTEO does not accept any liability for consequential losses arising from the use of this product data sheet or the information contained therein.

F0iS-SV SPD_OPT (<=500 Nm) System

Drawing

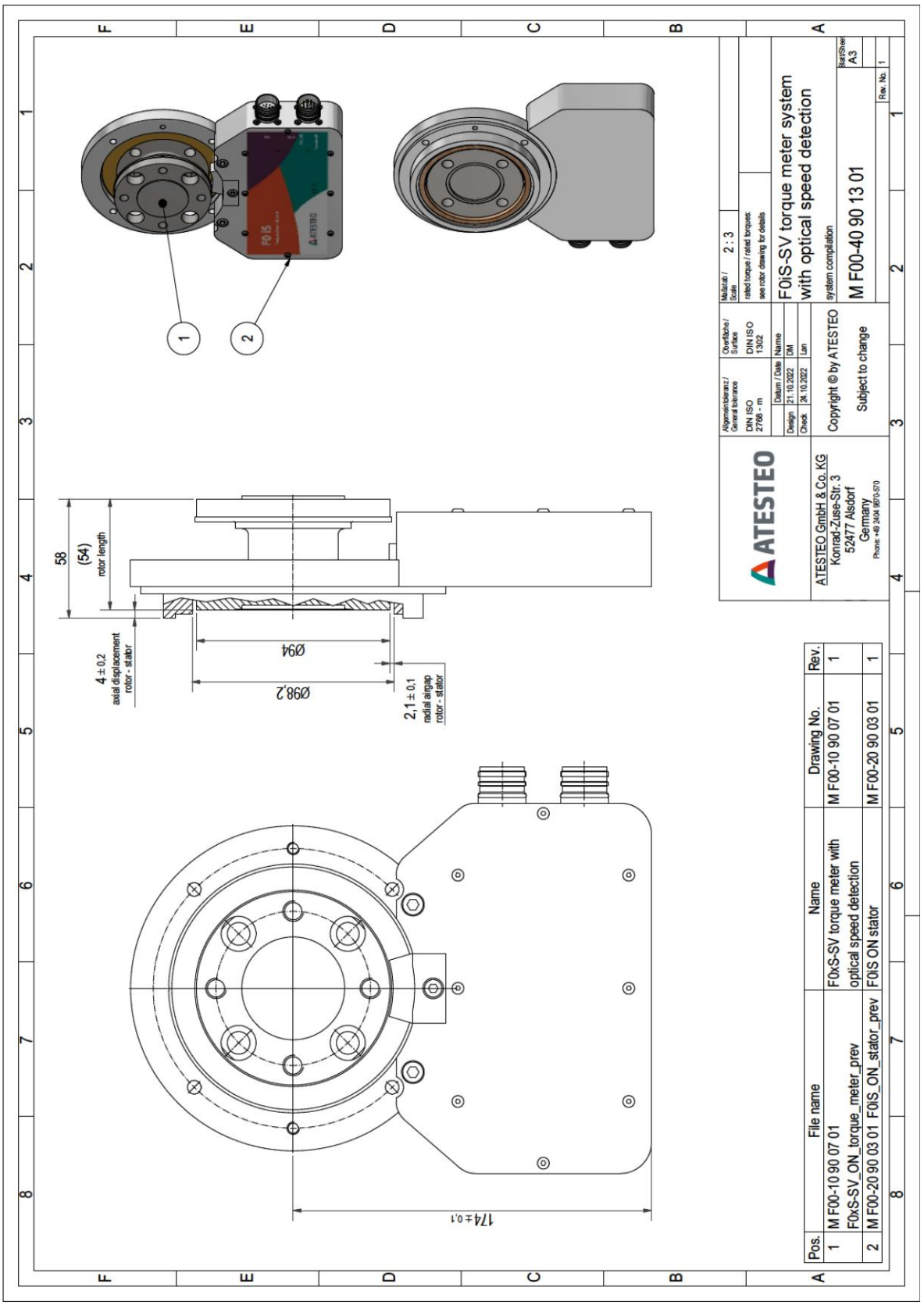

©2025, ATESTEO GmbH & Co. KG, This product data sheet was created on 10.22.2025.

The information contained in the product data sheet corresponds to the status quo at the time the document was created. ATESTEO continually further develops its products and reserves the right to make changes to the technical data. ATESTEO does not accept any liability for consequential losses arising from the use of this product data sheet or the information contained therein.

F0iS-SV SPD_OPT (<=500 Nm) Rotor

Drawing

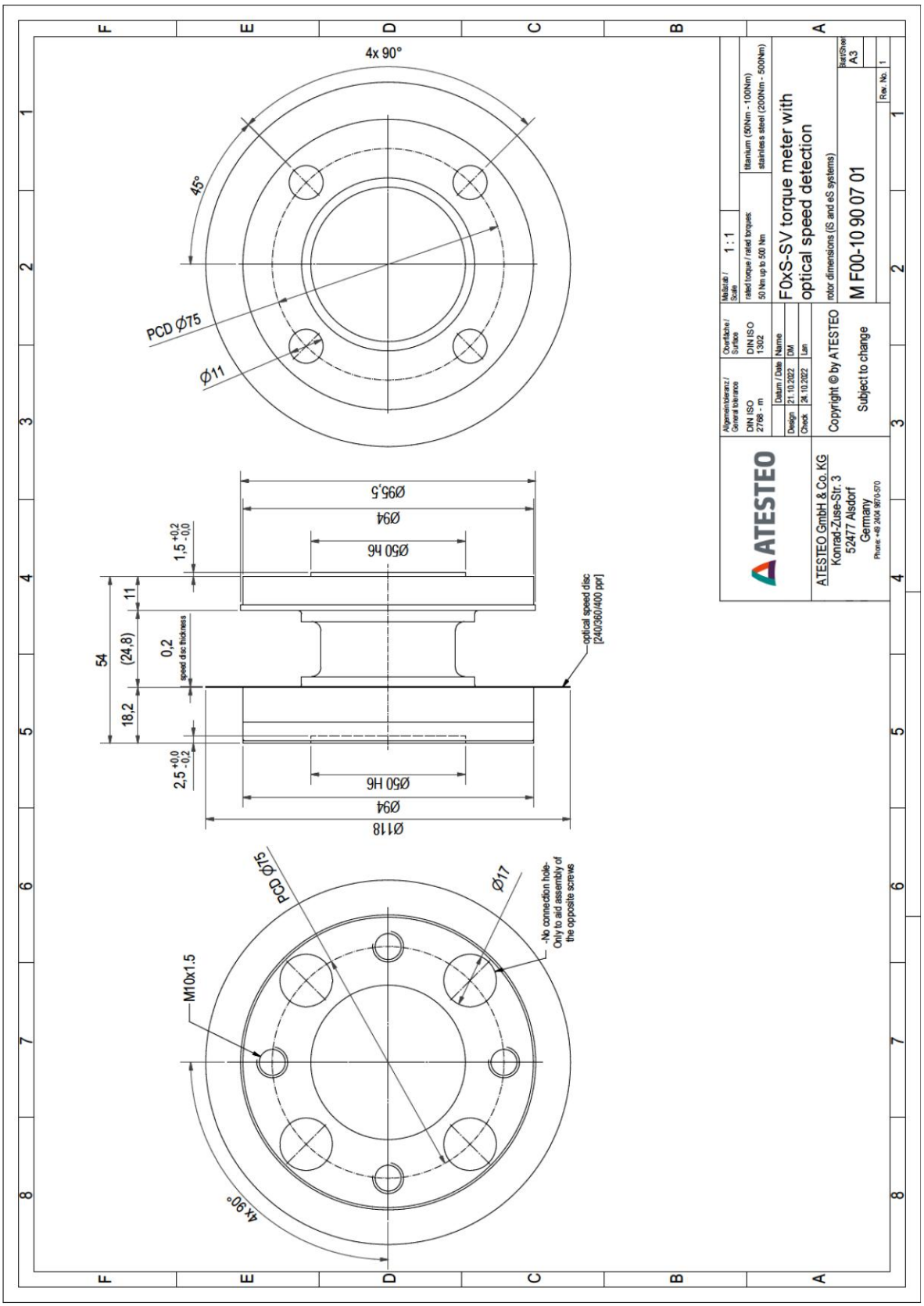

©2025, ATESTEO GmbH & Co. KG, This product data sheet was created on 10.22.2025.

The information contained in the product data sheet corresponds to the status quo at the time the document was created. ATESTEO continually further develops its products and reserves the right to make changes to the technical data. ATESTEO does not accept any liability for consequential losses arising from the use of this product data sheet or the information contained therein.

Drawing

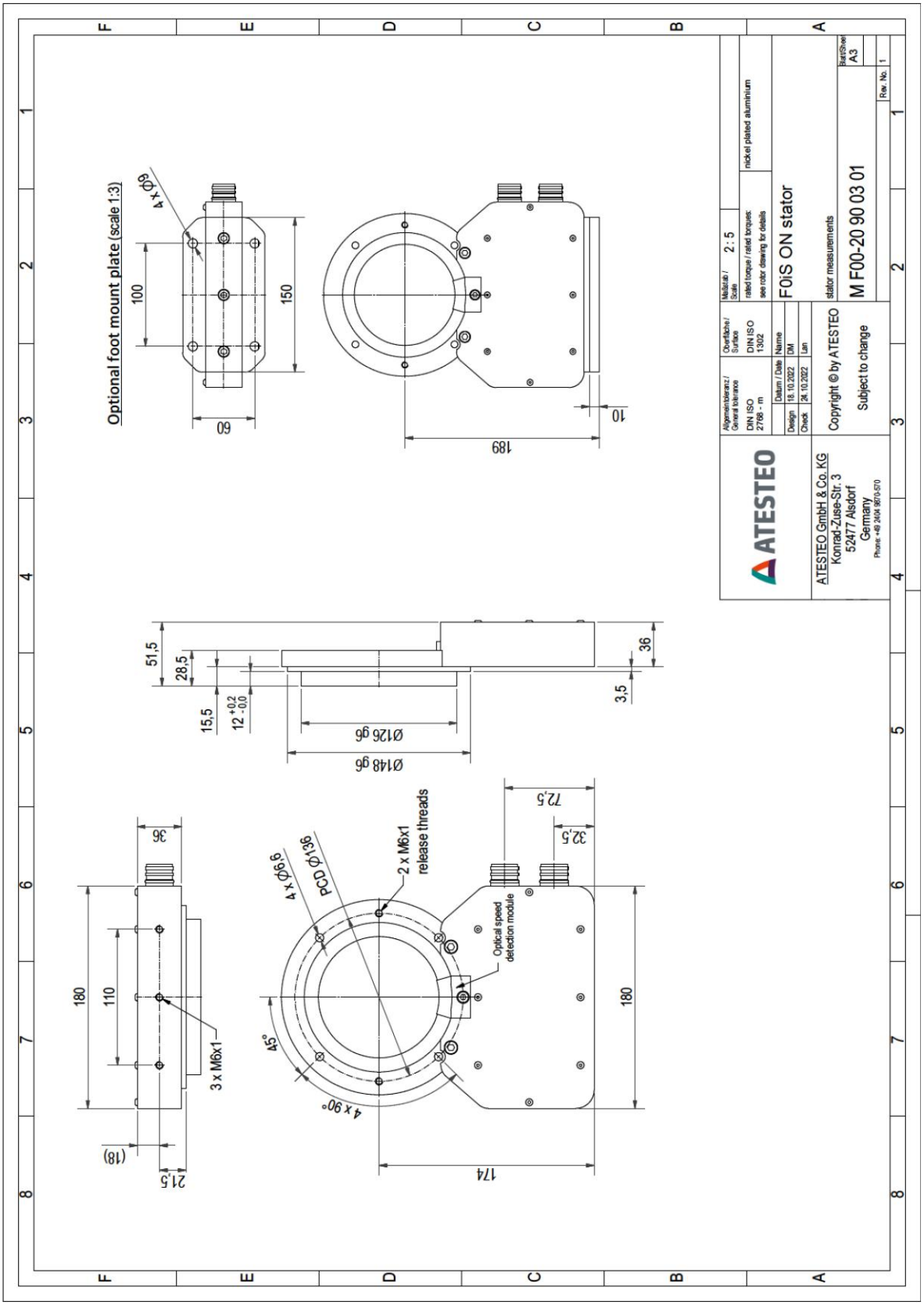

©2025, ATESTEO GmbH & Co. KG, This product data sheet was created on 10.22.2025.

The information contained in the product data sheet corresponds to the status quo at the time the document was created. ATESTEO continually further develops its products and reserves the right to make changes to the technical data. ATESTEO does not accept any liability for consequential losses arising from the use of this product data sheet or the information contained therein.

F0eS-SV (<=500 Nm) System

Drawing

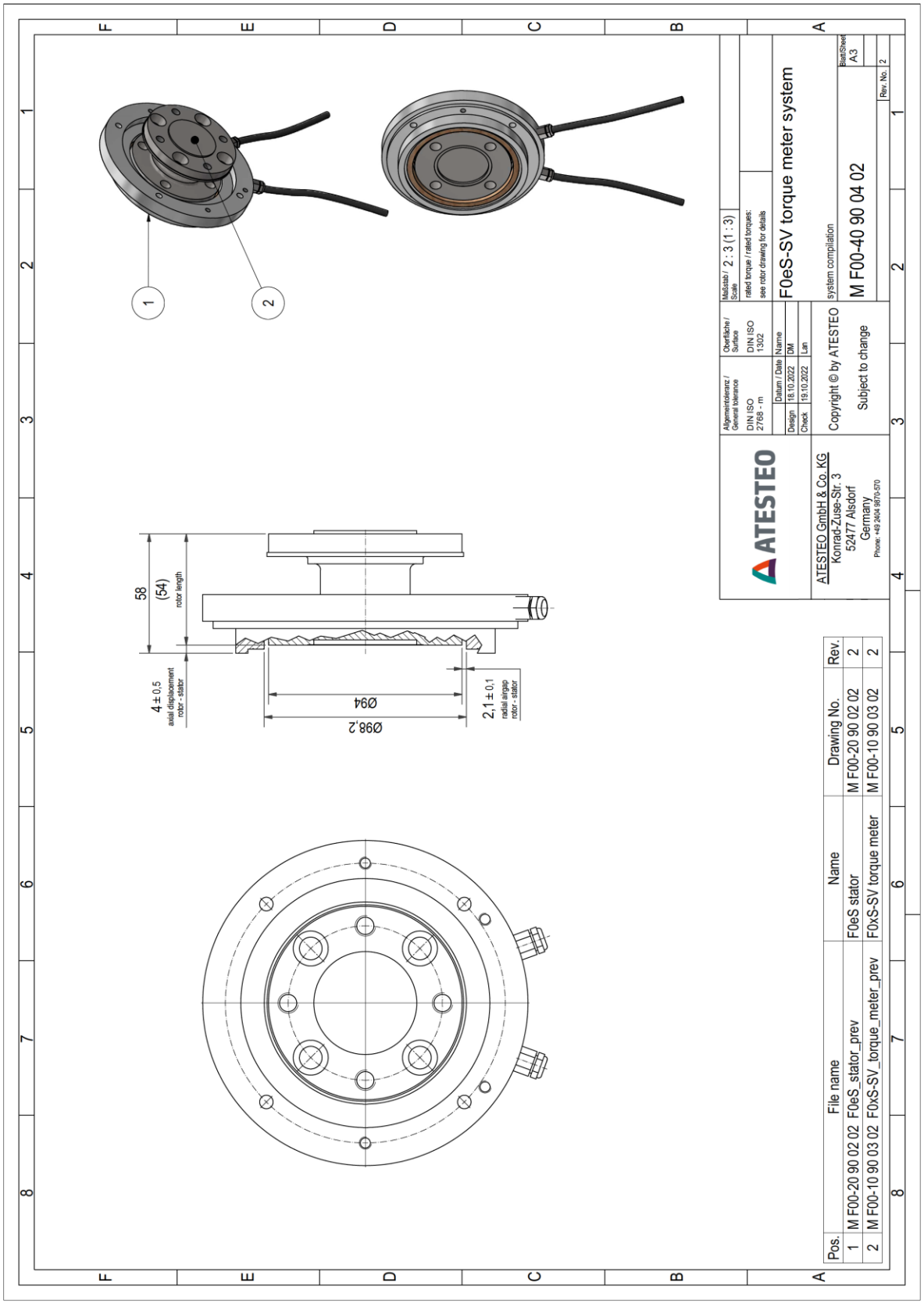

©2025, ATESTEO GmbH & Co. KG, This product data sheet was created on 10.22.2025.

The information contained in the product data sheet corresponds to the status quo at the time the document was created. ATESTEO continually further develops its products and reserves the right to make changes to the technical data. ATESTEO does not accept any liability for consequential losses arising from the use of this product data sheet or the information contained therein.

F0eS-SV (<=500 Nm) Rotor

Drawing

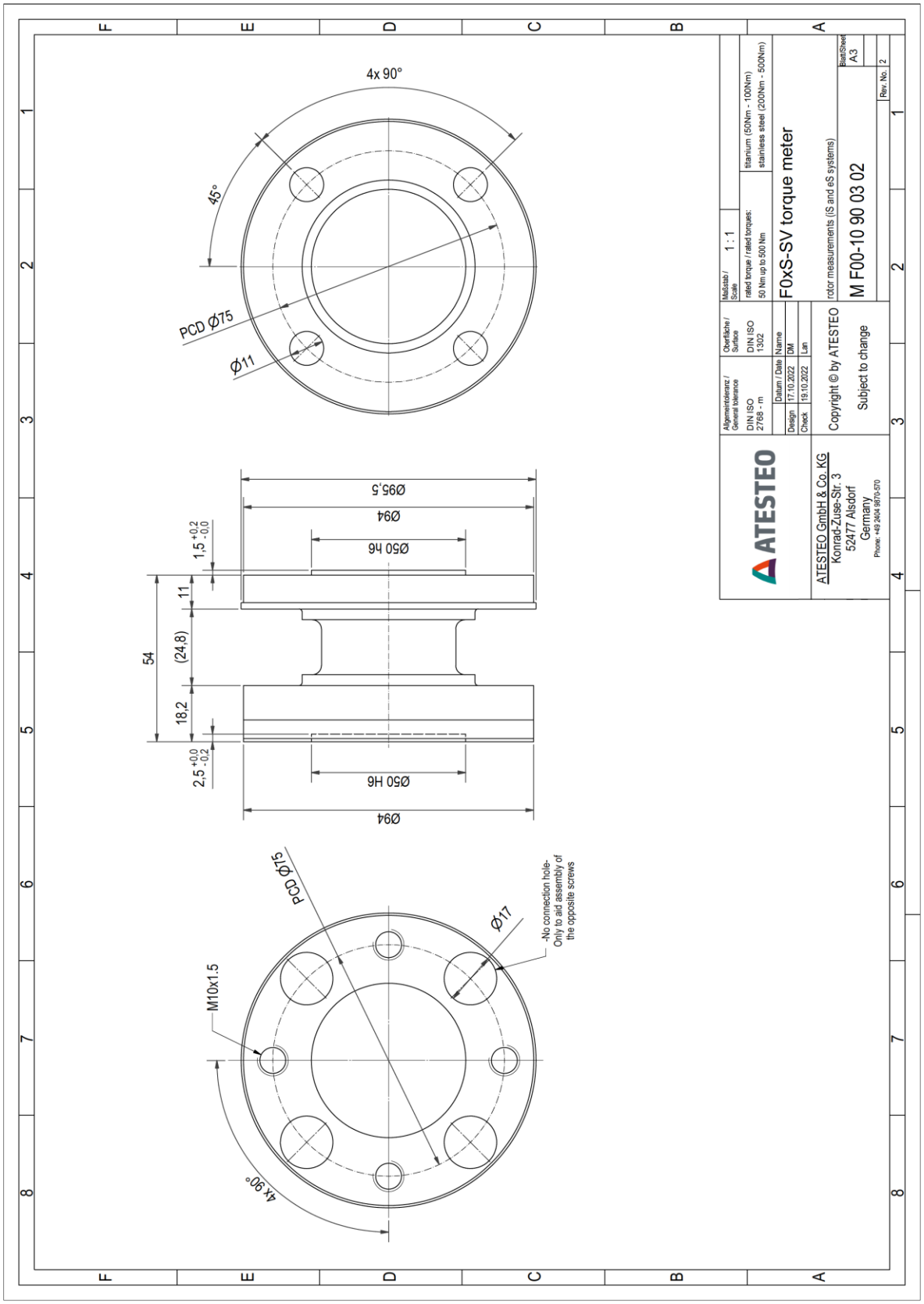

©2025, ATESTEO GmbH & Co. KG, This product data sheet was created on 10.22.2025.

The information contained in the product data sheet corresponds to the status quo at the time the document was created. ATESTEO continually further develops its products and reserves the right to make changes to the technical data. ATESTEO does not accept any liability for consequential losses arising from the use of this product data sheet or the information contained therein.

Drawing

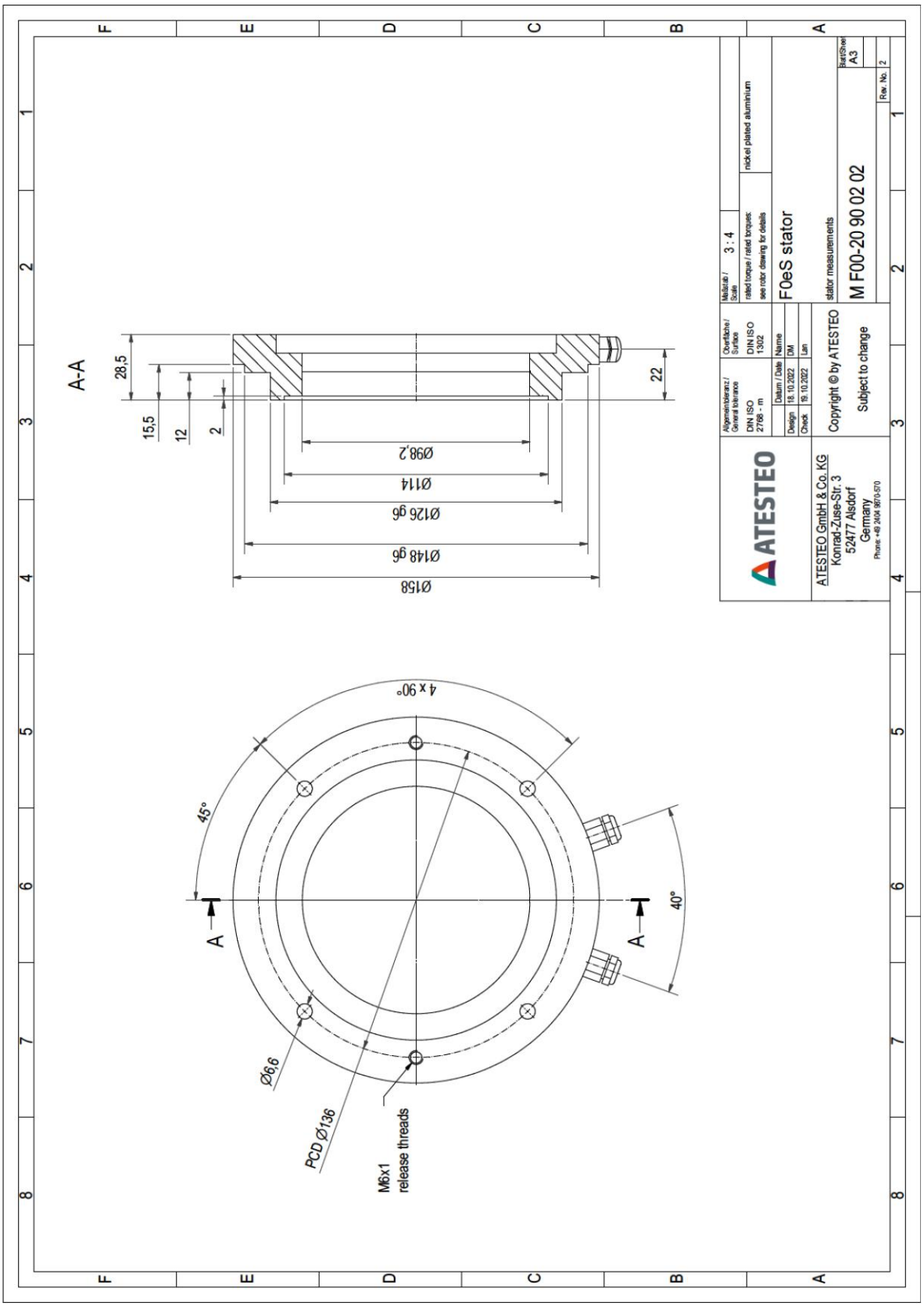

©2025, ATESTEO GmbH & Co. KG, This product data sheet was created on 10.22.2025.

The information contained in the product data sheet corresponds to the status quo at the time the document was created. ATESTEO continually further develops its products and reserves the right to make changes to the technical data. ATESTEO does not accept any liability for consequential losses arising from the use of this product data sheet or the information contained therein.

F0eS-SV SPD_OPT (<=500 Nm) System

Drawing

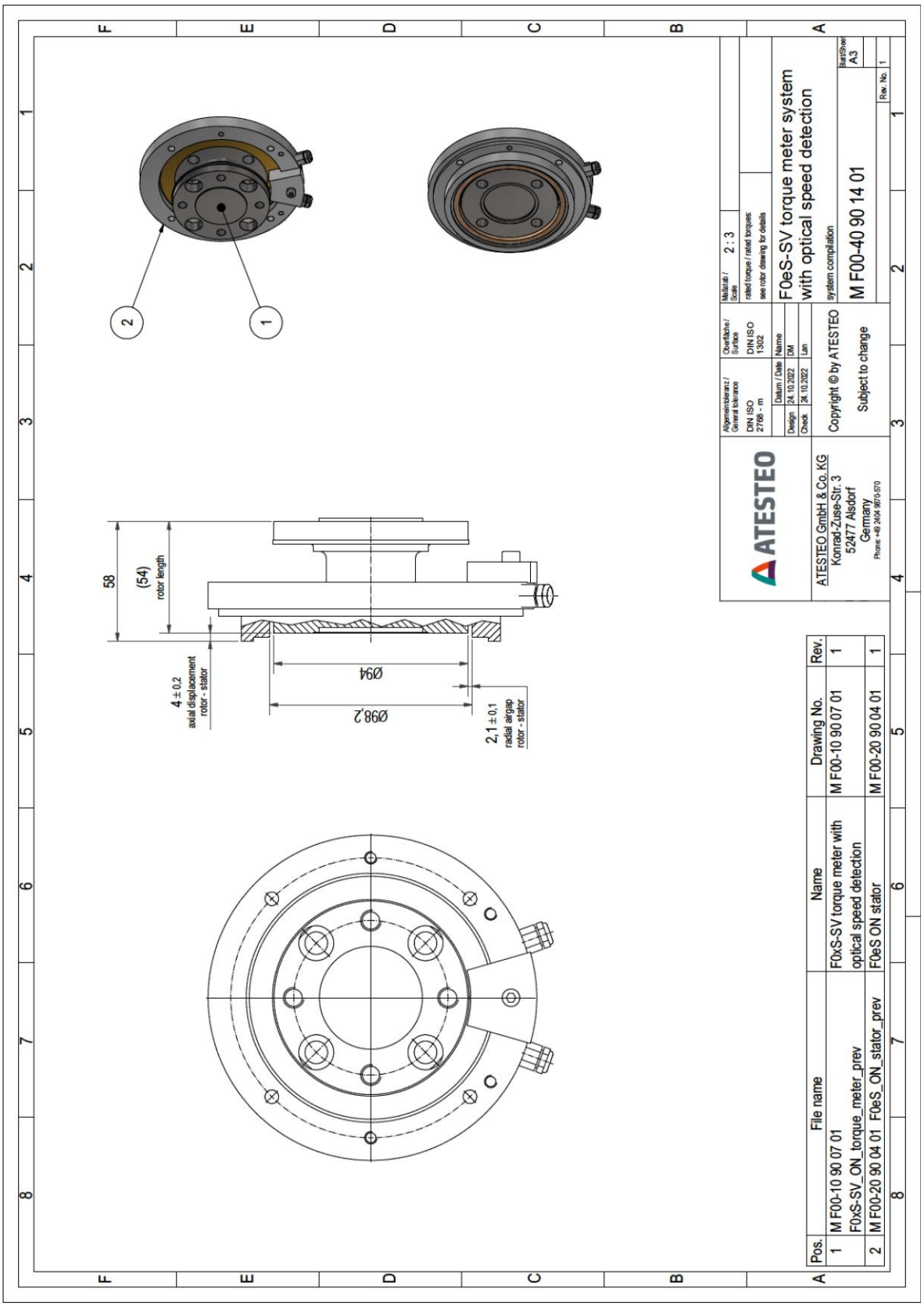

©2025, ATESTEO GmbH & Co. KG, This product data sheet was created on 10.22.2025.

The information contained in the product data sheet corresponds to the status quo at the time the document was created. ATESTEO continually further develops its products and reserves the right to make changes to the technical data. ATESTEO does not accept any liability for consequential losses arising from the use of this product data sheet or the information contained therein.

F0eS-SV SPD_OPT (<=500 Nm) Rotor

Drawing

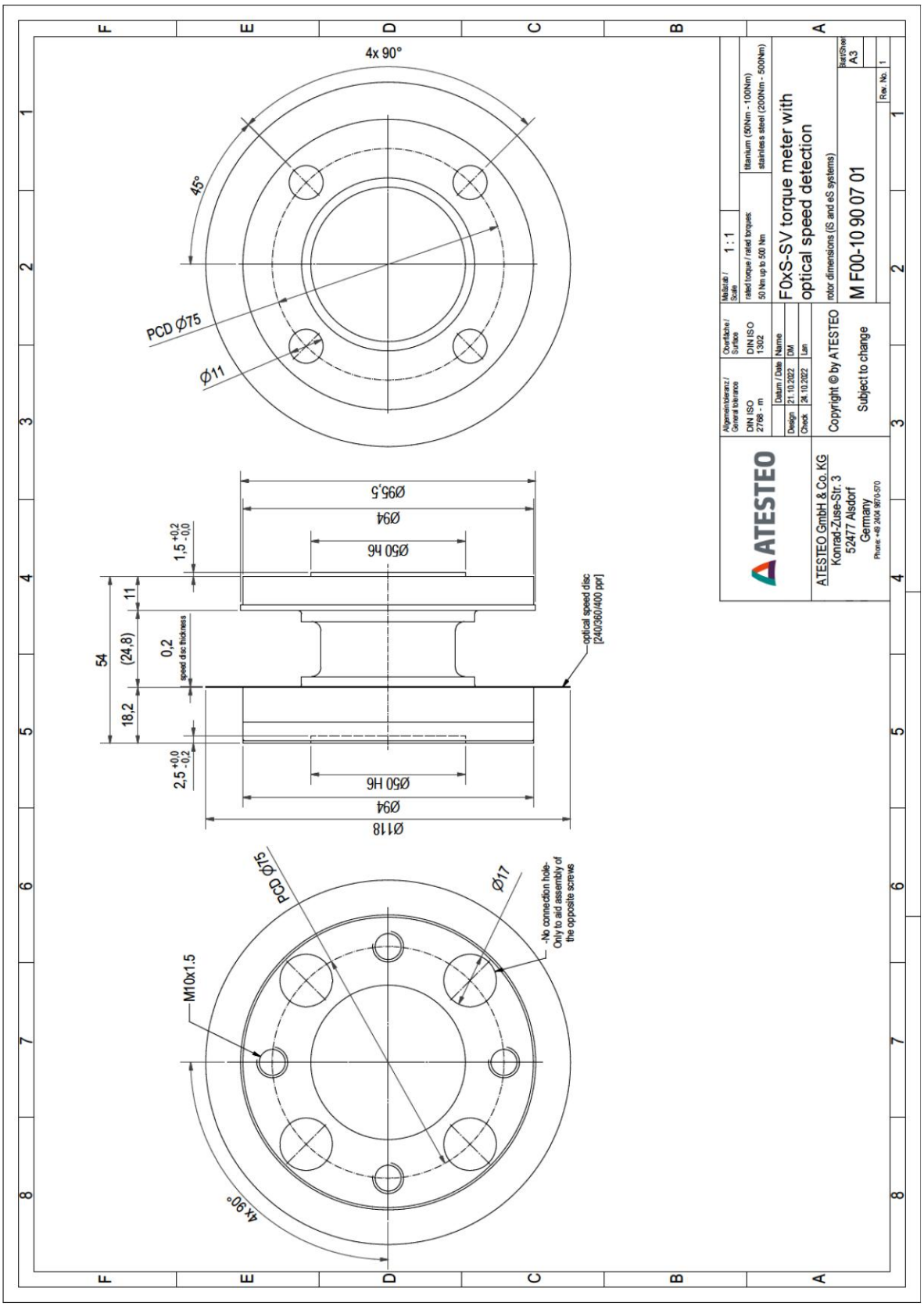

©2025, ATESTEO GmbH & Co. KG, This product data sheet was created on 10.22.2025.

The information contained in the product data sheet corresponds to the status quo at the time the document was created. ATESTEO continually further develops its products and reserves the right to make changes to the technical data. ATESTEO does not accept any liability for consequential losses arising from the use of this product data sheet or the information contained therein.

Drawing

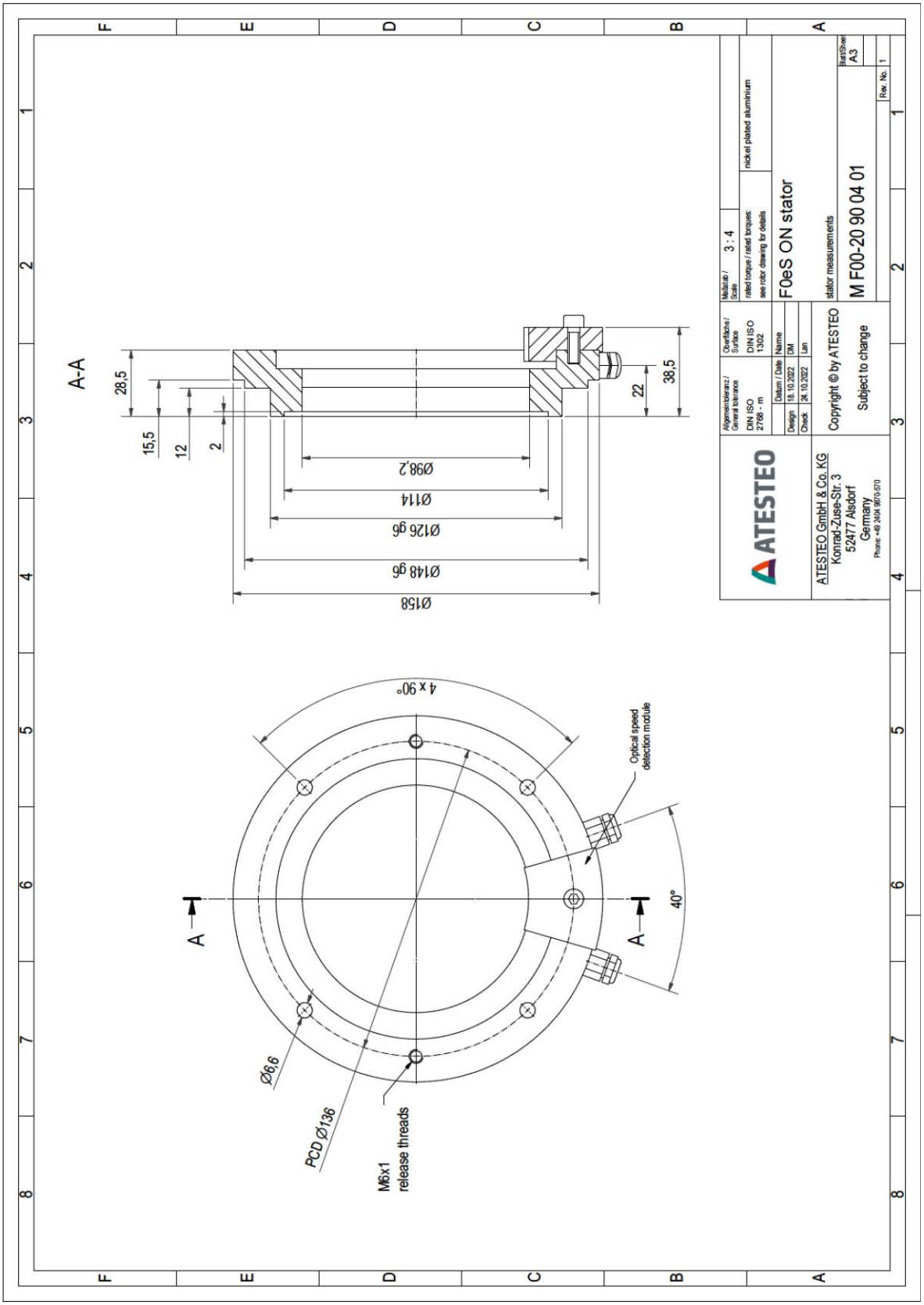

©2025, ATESTEO GmbH & Co. KG, This product data sheet was created on 10.22.2025.

The information contained in the product data sheet corresponds to the status quo at the time the document was created. ATESTEO continually further develops its products and reserves the right to make changes to the technical data. ATESTEO does not accept any liability for consequential losses arising from the use of this product data sheet or the information contained therein.

Drawing

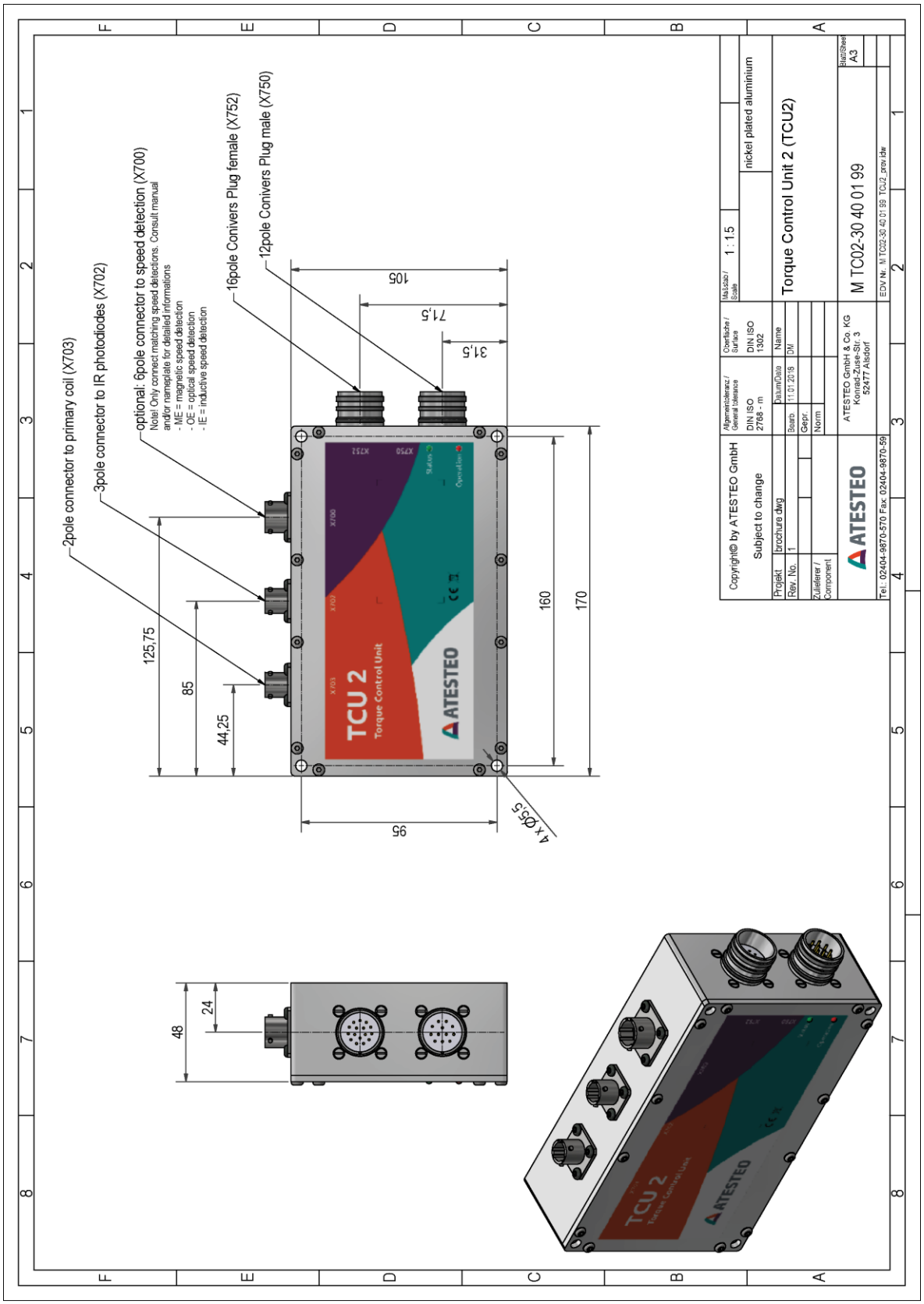

©2025, ATESTEO GmbH & Co. KG, This product data sheet was created on 10.22.2025.

The information contained in the product data sheet corresponds to the status quo at the time the document was created. ATESTEO continually further develops its products and reserves the right to make changes to the technical data. ATESTEO does not accept any liability for consequential losses arising from the use of this product data sheet or the information contained therein.

ATESTEO
Excellence in drivetrain testing

Would you like to learn more about our products, solutions, and services in the area of measuring systems, vehicle equipment, and actuators? Just call us at +49 (0) 2404 9870 570 or send email to equipment@atesteo.com. Your personal ATESTEO contact would be pleased to assist you.

ATESTEO GmbH & Co. KG
Konrad-Zuse-Straße 3
52477 Alsdorf
Germany

Phone +49 (0) 2404 9870 - 0
Email info@atesteo.com

Instrumentation Devices Srl
Via Acquanera 29 - 22100 COMO (Italy)
ph +39 031 525 391- fax +39 031 507 984
info@instrumentation.it - www.instrumentation.it