ATESTEO

Excellence in drivetrain testing

Data sheet

FxiS / FxeS

Instrumentation Devices

Instrumentation Devices Srl
Via Acquanera 29 - 22100 COMO (Italy)
ph +39 031 525 391- fax +39 031 507 984
info@instrumentation.it - www.instrumentation.it

Technical data

Type	-	F1iS	F1iS	F1eS	F1eS
Accuracy class	%	≤±0.05			
Rated torque (Md_n)	Nm	200 500 1,000 1,500	2,000 2,500 3,000	200 500 1,000 1,500	2,000 2,500 3,000
Torque measuring system					
Technology	-	Rotating			
Rated torque (Md_n) #1	Nm	200 500 1,000 1,500	2,000 2,500 3,000	200 500 1,000 1,500	2,000 2,500 3,000
Rated torque short measurement range (optional, minimum) (Md_{ns}) #2	Nm	40 100 200 300	400 500 600	40 100 200 300	400 500 600
Accuracy class (extended for Md_n)	%	≤±0.03			
Outputs	-	Frequency, Voltage, Current, CAN bus, Alert			
Test signal	-	see test report			
Mechanical dimensions #3					
Outer diameter of rotor #4	mm	150			
Lengths (Rotor, without centering)	mm	80			
Pitch circle diameter #5	mm	130.0			
Speeds and speed measuring systems					
Speed detection (integrated)	-	inductive			
Speed detection (optional)	-	magn.			
Maximum Speed without speed detection system	rpm	20,000			
Optional increased speed	rpm	25,000			
Maximum speed with magnetic speed encoder #6	rpm	up to 12,000			
Maximum speed with optical speed encoder	rpm	N/A			
Maximum speed with inductive speed encoder	rpm	20,000			
Torque accuracy class per output type (related to Md_n)					
Frequency output	%	≤±0.05			
CAN output	%	≤±0.05			
Voltage output	%	≤±0.10			
Current output	%	≤±0.10			
Frequency output (option higher accuracy)	%	≤±0.03			
CAN (option higher accuracy)	%	≤±0.03			

©2023, ATESTEO GmbH & Co. KG, This product data sheet was created on 03.27.2023.

The information contained in the product data sheet corresponds to the status quo at the time the document was created. ATESTEO continually further develops its products and reserves the right to make changes to the technical data. ATESTEO does not accept any liability for consequential losses arising from the use of this product data sheet or the information contained therein.

Technical data

Type	-	F1iS	F1iS	F1eS	F1eS
Accuracy class	%	≤±0.05			
Rated torque (Md_n)	Nm	200 500 1,000 1,500	2,000 2,500 3,000	200 500 1,000 1,500	2,000 2,500 3,000

Linearity deviation including hysteresis related to Md_n #7		
Frequency, 0%...30%	%	≤±0.010
Frequency, 30%...60%	%	≤±0.020
Frequency, 60%...100%	%	≤±0.030
CAN, 0%...30%	%	≤±0.010
CAN, 30%...60%	%	≤±0.020
CAN, 60%...100%	%	≤±0.030
Voltage output	%	≤±0.05
Current output	%	≤±0.05
Rel. standard deviation of the reproducibility according to DIN 1319, by reference to variation of the output signal (rel. to Md_n)		
Frequency output	%	≤±0.03
CAN output	%	≤±0.03
Voltage output	%	≤±0.05
Current output	%	≤±0.05
Temperature influence per 10K in the nominal temperature range on the output signal related to the actual value of signal span (rel. to Md_n)		
Frequency output	%	≤±0.05
CAN output	%	≤±0.05
Voltage output	%	≤±0.10
Current output	%	≤±0.10
Temperature influence per 10K in the nominal temperature range on the zero signal (rel. to Md_n)		
Frequency output	%	≤±0.05
CAN output	%	≤±0.05
Voltage output	%	≤±0.10
Current output	%	≤±0.10
Long-term drift over 48h at reference temperature		
Voltage output	mV	<1.0
Current output	µA	<0.80

©2023, ATESTEO GmbH & Co. KG, This product data sheet was created on 03.27.2023.

The information contained in the product data sheet corresponds to the status quo at the time the document was created. ATESTEO continually further develops its products and reserves the right to make changes to the technical data. ATESTEO does not accept any liability for consequential losses arising from the use of this product data sheet or the information contained therein.

Technical data

Type	-	F1iS	F1iS	F1eS	F1eS
Accuracy class	%	≤±0.05			
Rated torque (Md_n)	Nm	200 500 1,000 1,500	2,000 2,500 3,000	200 500 1,000 1,500	2,000 2,500 3,000

Nominal sensitivity (range between zero torque and rated torque)		
Frequency output	kHz	20
Voltage output	V	5.0 / 10.0 / 2.5 / 5.0
Current output	mA	8 / 10
Output signal at zero torque		
Frequency output	kHz	60
Voltage output	V	0.0 / 0.0 / 2.5 / 5.0
Current output	mA	12 / 10
Nominal output signal		
Frequency output at positive nominal value	kHz	80
Frequency output at negative nominal value	kHz	40
Voltage output at positive nominal value	V	5 / 10 / 5 / 10
Voltage output at negative nominal value	V	-5 / -10 / 0 / 0
Current output at positive nominal value	mA	20 / 20
Current output at negative nominal value	mA	4 / 0
Max. modulation range		
Frequency output	kHz	30...90
Voltage output	V	-10.5...10.5
Current output	mA	0...24
Group delay time (main TCU)		
Frequency output	µs	10
Voltage output	µs	3,000
CAN	µs	1,000

©2023, ATESTEO GmbH & Co. KG, This product data sheet was created on 03.27.2023.

The information contained in the product data sheet corresponds to the status quo at the time the document was created. ATESTEO continually further develops its products and reserves the right to make changes to the technical data. ATESTEO does not accept any liability for consequential losses arising from the use of this product data sheet or the information contained therein.

Technical data

Type	-	F1iS	F1iS	F1eS	F1eS
Accuracy class	%	≤±0.05			
Rated torque (Md_n)	Nm	200 500 1,000 1,500	2,000 2,500 3,000	200 500 1,000 1,500	2,000 2,500 3,000

Speed measuring system	Inductive (track at rotor)	
Pulse per rev (PPR)	ppr.	60
Maximum speeds (related to PPR)	rpm	20,000
Max. output frequency (RS422)	kHz	20
Minimum speed for sufficient pulse stability	rpm	>5.0
Speed measuring system	**Magneto resistive (2 tracks approx. 90 degree phase shifted)**	
Pulses per rev (PPR)	ppr.	1,000
Maximum speeds (related to PPR)	rpm	9,000 / 12,000
Max. output frequency (RS422)	kHz	150 / 200
Minimum speed for sufficient pulse stability	rpm	>0.3
Nominal clearance (sensor - pole ring)	mm	0.7
Working airgap (sensor - pole ring)	mm	0.1...1.0
Nominal axial displacement (rotor - stator) #8	mm	2.0
Tolerance to nominal axial displacement (rotor - stator)	mm	±0.5
Speed measuring system	**Optical**	
Pulses per rev (PPR)	ppr.	N/A
Maximum speeds (related to PPR)	rpm	N/A
Max. output frequency (RS422)	kHz	N/A
Minimum speed for sufficient pulse stability	rpm	N/A
Nominal radial displacement (rotor - stator)	mm	N/A
Tolerated radial displacement (rotor - stator) #8	mm	N/A
Nominal axial displacement (rotor - stator) #8	mm	N/A
Tolerance to nominal axial displacement (rotor - stator)	mm	N/A

©2023, ATESTEO GmbH & Co. KG, This product data sheet was created on 03.27.2023.

The information contained in the product data sheet corresponds to the status quo at the time the document was created. ATESTEO continually further develops its products and reserves the right to make changes to the technical data. ATESTEO does not accept any liability for consequential losses arising from the use of this product data sheet or the information contained therein.

Technical data

Type	-	F1iS	F1iS	F1eS	F1eS
Accuracy class	%	≤±0.05			
Rated torque (Md_n)	Nm	200 500 1,000 1,500	2,000 2,500 3,000	200 500 1,000 1,500	2,000 2,500 3,000

Angular measuring system		
Pulses per rev	ppr	N/A
Resolution	°	N/A
Output signals	-	N/A
Measurement ranges	°	N/A

©2023, ATESTEO GmbH & Co. KG, This product data sheet was created on 03.27.2023.

The information contained in the product data sheet corresponds to the status quo at the time the document was created. ATESTEO continually further develops its products and reserves the right to make changes to the technical data. ATESTEO does not accept any liability for consequential losses arising from the use of this product data sheet or the information contained therein.

Technical data

Type	-	F1iS	F1iS	F1eS	F1eS
Accuracy class	%	≤±0.05			
Rated torque (Md_n)	Nm	200 500 1,000 1,500	2,000 2,500 3,000	200 500 1,000 1,500	2,000 2,500 3,000
Temperature ranges					
Nominal temperature range *(Rotor)*	°C	0...80			
Operating temperature range *(Rotor)* *#9*	°C	-20...85			
Storage temperature range *(Rotor)*	°C	-30...85			
Nominal temperature range *(Stator)*	°C	0...70	0...70	0...80	0...80
Operating temperature range *(Stator)* *#10*	°C	-20...70	-20...70	-20...85	-20...85
Storage temperature range *(Stator)*	°C	-30...85			
Nominal temperature range *(TCU)*	°C	N/A	N/A	0...70	0...70
Operating temperature range *(TCU)*	°C	N/A	N/A	-20...70	-20...70
Storage temperature range *(TCU)*	°C	N/A	N/A	-30...85	-30...85
Mechanical shock (EN 60068-2-27)					
Quantity	-	1,000			
Duration	ms	3			
Acceleration	m/s²	650			
Vibration load (EN 60068-2-6)					
Frequency	Hz	10...2,000			
Duration	min.	150			
Acceleration	m/s²	200			
Load limits #11					
Limit torque, related to Md_n	%	400 250 250 225	200 175 175	400 250 250 225	200 175 175
Breaking torque approx., related to Md_n	%	800 500 500 450	400 350 350	800 500 500 450	400 350 350
Axial limit force	kN	6.90 8.60 14.50 16.90	19.10 21.00 22.80	6.90 8.60 14.50 16.90	19.10 21.00 22.80
Lateral limit force	N	600.00 945.00 2,870.00 3,980.00	5,090.00 6,130.00 7,110.00	600.00 945.00 2,870.00 3,980.00	5,090.00 6,130.00 7,110.00
Bending limit torque	Nm	24.00 36.00 117.00 152.00	187.00 220.00 251.00	24.00 36.00 117.00 152.00	187.00 220.00 251.00

©2023, ATESTEO GmbH & Co. KG, This product data sheet was created on 03.27.2023.

The information contained in the product data sheet corresponds to the status quo at the time the document was created. ATESTEO continually further develops its products and reserves the right to make changes to the technical data. ATESTEO does not accept any liability for consequential losses arising from the use of this product data sheet or the information contained therein.

Technical data

Type	-	F1iS	F1iS	F1eS	F1eS
Accuracy class	%	≤±0.05			
Rated torque (Md_n)	Nm	200 500 1,000 1,500	2,000 2,500 3,000	200 500 1,000 1,500	2,000 2,500 3,000
Mechanical values					
Torsional stiffness	kNm/rad	87 148 448 625	806 978 1,143	87 148 448 625	806 978 1,143
Angle of twist at Md_n	°	0.130 0.190 0.130 0.140	0.140 0.150 0.150	0.130 0.190 0.130 0.140	0.140 0.150 0.150
Axial stiffness	kN/mm	230 287 483 565	639 703 761	230 287 483 565	639 703 761
Radial stiffness	kN/mm	37 59 169 234	299 361 418	37 59 169 234	299 361 418
Bending stiffness	kNm/°	0.90 1.40 3.90 5.10	6.20 7.30 8.40	0.90 1.40 3.90 5.10	6.20 7.30 8.40
Deflection at axial limit force	mm	<0.04			
Additional radial deviation at lateral limit force	mm	<0.02			
Parallel deviation at bending limit torque	mm	<0.07 <0.07 <0.08 <0.08	<0.08	<0.07 <0.07 <0.08 <0.08	<0.08
Inherent frequency	Hz	620 770 1,360 1,590	1,790 1,960 2,100	620 770 1,360 1,590	1,790 1,960 2,100
Balance quality-level (DIN ISO 1949)	-	G2.5			
Inertia of rotor	kgm²	0.0113	0.0114 0.0115 0.0115	0.0113	0.0114 0.0115 0.0115
Max. limits for relative shaft vibration (peak to peak) #12	µm	$S_{(p-p)} = \frac{9000}{\sqrt{n}}$			

©2023, ATESTEO GmbH & Co. KG, This product data sheet was created on 03.27.2023.

The information contained in the product data sheet corresponds to the status quo at the time the document was created. ATESTEO continually further develops its products and reserves the right to make changes to the technical data. ATESTEO does not accept any liability for consequential losses arising from the use of this product data sheet or the information contained therein.

Technical data

Type	-	F1iS	F1iS	F1eS	F1eS
Accuracy class	%	≤±0.05			
Rated torque (Md_n)	Nm	200 500 1,000 1,500	2,000 2,500 3,000	200 500 1,000 1,500	2,000 2,500 3,000
Weight approx.					
Rotor #13	kg	4.0 4.1 4.1 4.1	4.2 4.3 4.3	4.0 4.1 4.1 4.1	4.2 4.3 4.3
Stator (without speed encoder) #13	kg	2.10	2.10	2.20	2.20
Mounting distances (without optional speed detection system)					
Nominal radial displacement (rotor - stator)	mm	2.5			
Tolerance to nominal radial displacement (rotor - stator)	mm	≤±0.2			
Nominal axial displacement (rotor - stator) #8	mm	2			
Tolerance to nominal axial displacement (rotor - stator)	mm	≤±0.5			
Flatness and concentricity tolerances rotor					
Circular run-out-axial tolerance #14	mm	0.01			
Circular run-out-radial tolerance #14	mm	0.01			
Power supply					
Nominal supply	V (DC)	24			
Supply range #15	V (DC)	23...25			
Max. current consumption in measuring mode	A	<0.70			
Max. current consumption in start-up mode	A	<2			
Nominal power consumption	W	<17			
Load resistance					
Frequency output	-	RS422			
Voltage output	kOhm	≥5			
Dynamic					
Frequency output	kHz	≤7			
Voltage output	kHz	≤1			
Current output	kHz	≤1			
CAN output conversation rate	1/s	≤1,000			

©2023, ATESTEO GmbH & Co. KG, This product data sheet was created on 03.27.2023.

The information contained in the product data sheet corresponds to the status quo at the time the document was created. ATESTEO continually further develops its products and reserves the right to make changes to the technical data. ATESTEO does not accept any liability for consequential losses arising from the use of this product data sheet or the information contained therein.

Technical data

Type	-	F1iS	F1iS	F1eS	F1eS
Accuracy class	%	≤±0.05			
Rated torque (Md_n)	Nm	200 500 1,000 1,500	2,000 2,500 3,000	200 500 1,000 1,500	2,000 2,500 3,000

Miscellaneous					
Protection class (rotor)	-	IP54			
Protection class (stator)	-	IP54			
Protection class (rotor, extended)	-	On request			
Protection class (stator, extended)	-	On request			
Pitch circle screw information	-	8 * M12 (10.9)	8 * M12 (12.9)	8 * M12 (10.9)	8 * M12 (12.9)
CAN	-	2B			
Configuration interface	-	RS232			
Central hole	mm	15 (optional)			
Material	-	Steel			
Measuring range (related to Md_n)	%	120			
Compatible evaluation units (TCU)	-	Integrated	Integrated	TCU2	TCU2
Stator type	-	iS	iS	eS	eS
Sales information					
Article number	-	10000048	10006920	10000913	10006921
U.S. FCC certificate		Not required			

©2023, ATESTEO GmbH & Co. KG, This product data sheet was created on 03.27.2023.

The information contained in the product data sheet corresponds to the status quo at the time the document was created. ATESTEO continually further develops its products and reserves the right to make changes to the technical data. ATESTEO does not accept any liability for consequential losses arising from the use of this product data sheet or the information contained therein.

Remarks and information

Link no.	Topic	Remark
#1	Nominal torque	Based on customer requests, the measurement systems can optionally be optimized for not listed nominal torque values (intermediate ranges possible).
#2	Second torque range	The written second nominal torque value (Md_{ns}) is the smallest possible. Greater second torque ranges can be chosen on demand. Mechanical values and load limits vary between single and dual range torque meters. A data sheet for dual range torque meters with specific values can be requested.
#3	Dimensions	Mechanical dimensions are without engagement. Use the drawings and step files as master for your constructions.
#4	Detail in the drawings	Value can vary by optional components. Please find details to this attribute in the integrated drawings.
#5	Pitch circle diameter	The pitch circle diameter is identically at input and output side for most systems. More information is given in the drawings of a product.
#6	Speed detection max speed	The maximum allowed speed of speed detection systems is depending on the number of pulses per rotation (PPR). High PPRs can reduce the maximum allowed speed. Details are shown within this data sheet in the description of the speed detection system.
#7	Linearity	Values of Linearity deviation incl. Hysteresis can only be reached if positive and negative sensitivity values are used.
#8	Reference planes	Please check the drawings for information about the reference planes of this attribute.
#9	Temperature range (rotor)	No condensation allowed.
#10	Temperature range (stator)	No condensation allowed. Temperature related to housing ground point.

©2023, ATESTEO GmbH & Co. KG, This product data sheet was created on 03.27.2023.

The information contained in the product data sheet corresponds to the status quo at the time the document was created. ATESTEO continually further develops its products and reserves the right to make changes to the technical data. ATESTEO does not accept any liability for consequential losses arising from the use of this product data sheet or the information contained therein.

Remarks and information

Link no.	Topic	Remark
#11	Load limits	The given values are only valid if no other load occurs at the same time. If the loads in sum are 100%, the max. error will be 0.3% of the nominal torque.
#12	Vibration limits	Vibration limits are not an influence to the machine. They reflect the allowed effect onto the rotor (ISO 7919-3). Parameter "n" is given in "r/min.".
#13	Weights	Weights are related to components without options like speed detection system. Please contact us for exact weight information of options.
#14	Flatness and concentricity tolerances	The parameters of "Flatness and concentricity tolerances rotor" are manufacturing tolerances.
#15	Supply voltage	The supply voltage range must be given at measurement system side. Long wires can reduce the voltage level from power supply to measurement system.

©2023, ATESTEO GmbH & Co. KG, This product data sheet was created on 03.27.2023.

The information contained in the product data sheet corresponds to the status quo at the time the document was created. ATESTEO continually further develops its products and reserves the right to make changes to the technical data. ATESTEO does not accept any liability for consequential losses arising from the use of this product data sheet or the information contained therein.

iS/eS variant

Drawing

iS

Rotor & stator with integrated evaluation unit (TCU)
Rotor & Stator mit integrierter Auswerteeinheit (TCU)

eS

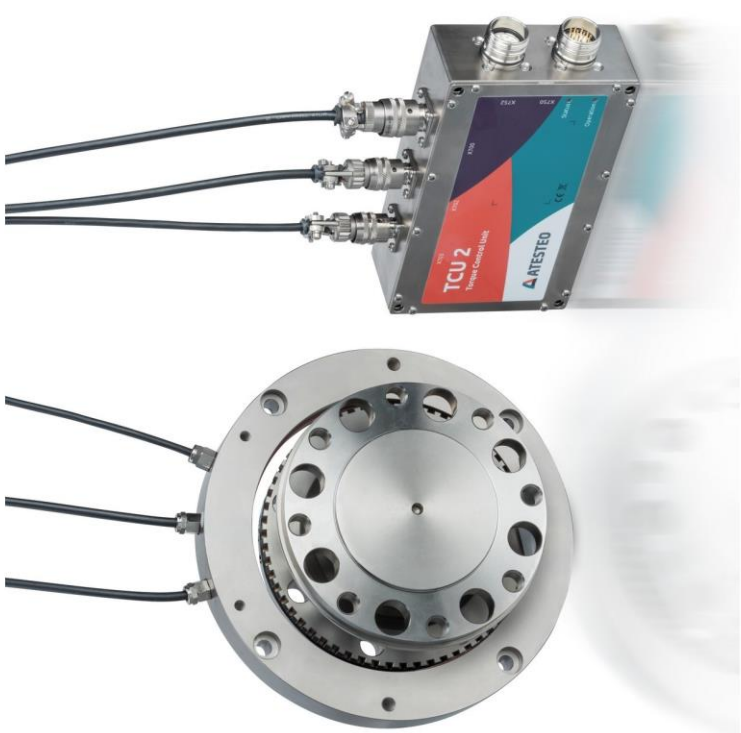

Rotor, ring stator & external evaluation unit (TCU)
Rotor, Ringstator & abgesetzte Auswerteeinheit (TCU)

©2023, ATESTEO GmbH & Co. KG, This product data sheet was created on 03.27.2023.

The information contained in the product data sheet corresponds to the status quo at the time the document was created. ATESTEO continually further develops its products and reserves the right to make changes to the technical data. ATESTEO does not accept any liability for consequential losses arising from the use of this product data sheet or the information contained therein.

Drawing

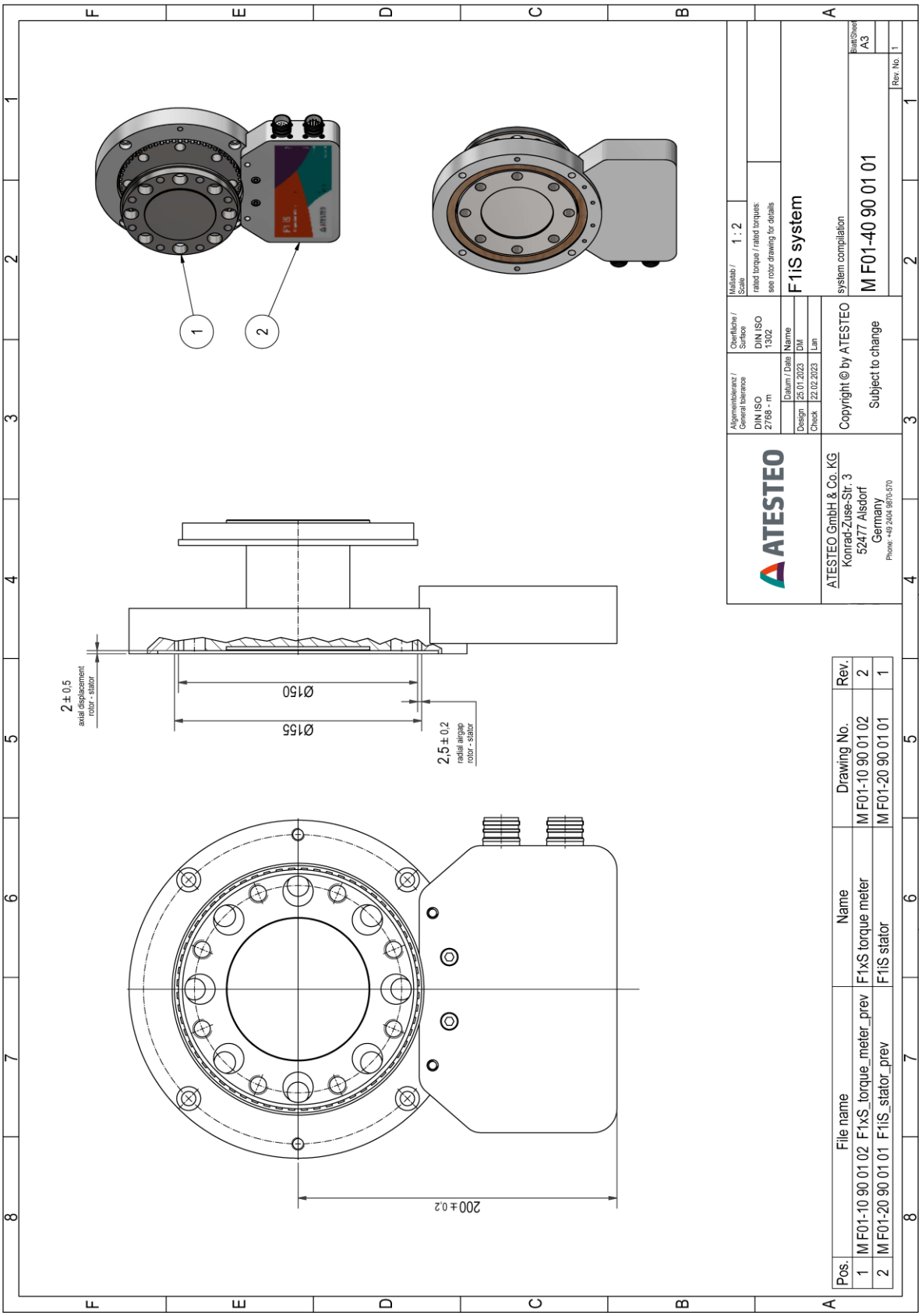

©2023, ATESTEO GmbH & Co. KG, This product data sheet was created on 03.27.2023.

The information contained in the product data sheet corresponds to the status quo at the time the document was created. ATESTEO continually further develops its products and reserves the right to make changes to the technical data. ATESTEO does not accept any liability for consequential losses arising from the use of this product data sheet or the information contained therein.

F1iS Rotor

Drawing

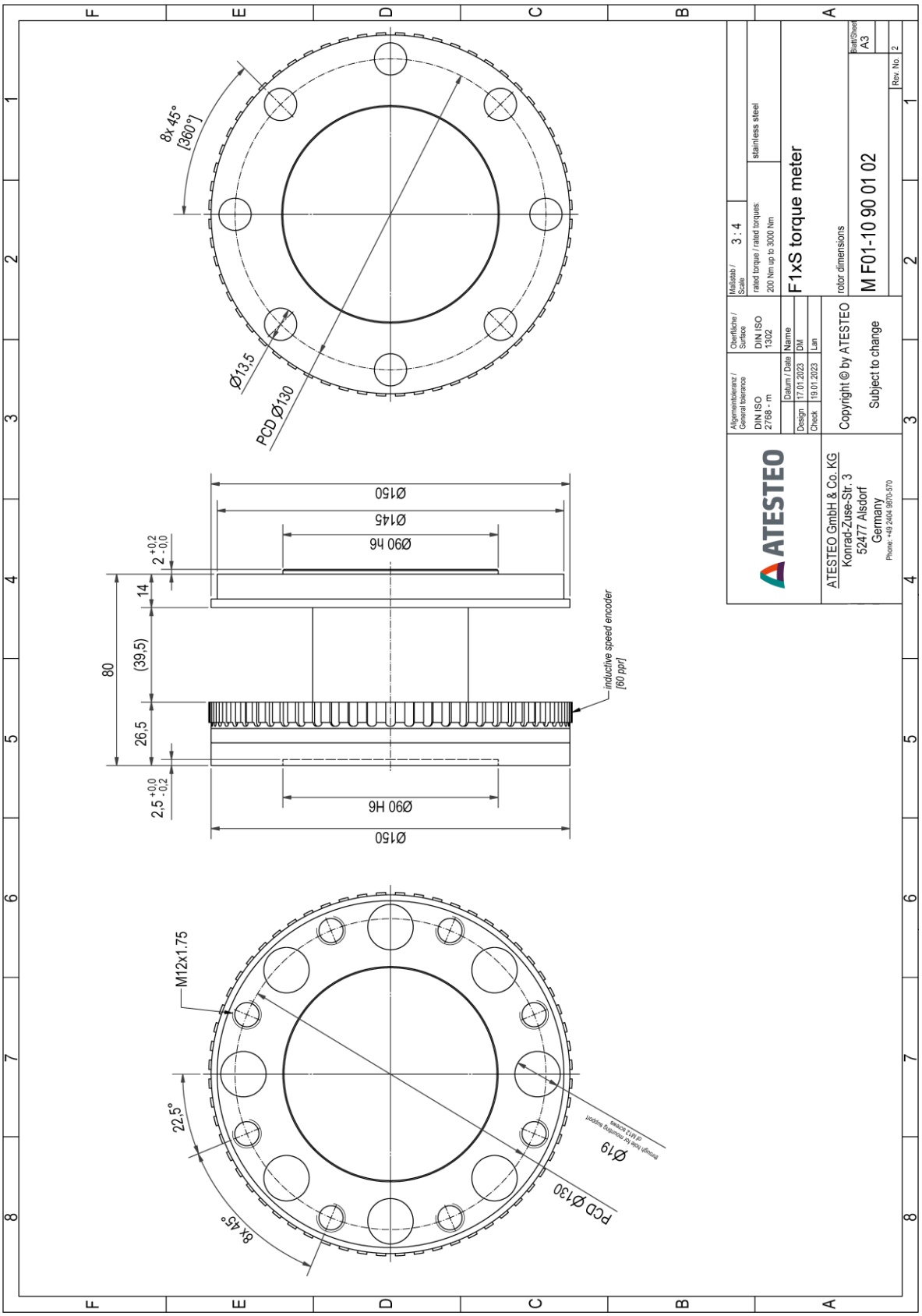

©2023, ATESTEO GmbH & Co. KG, This product data sheet was created on 03.27.2023.

The information contained in the product data sheet corresponds to the status quo at the time the document was created. ATESTEO continually further develops its products and reserves the right to make changes to the technical data. ATESTEO does not accept any liability for consequential losses arising from the use of this product data sheet or the information contained therein.

F1iS Stator

Drawing

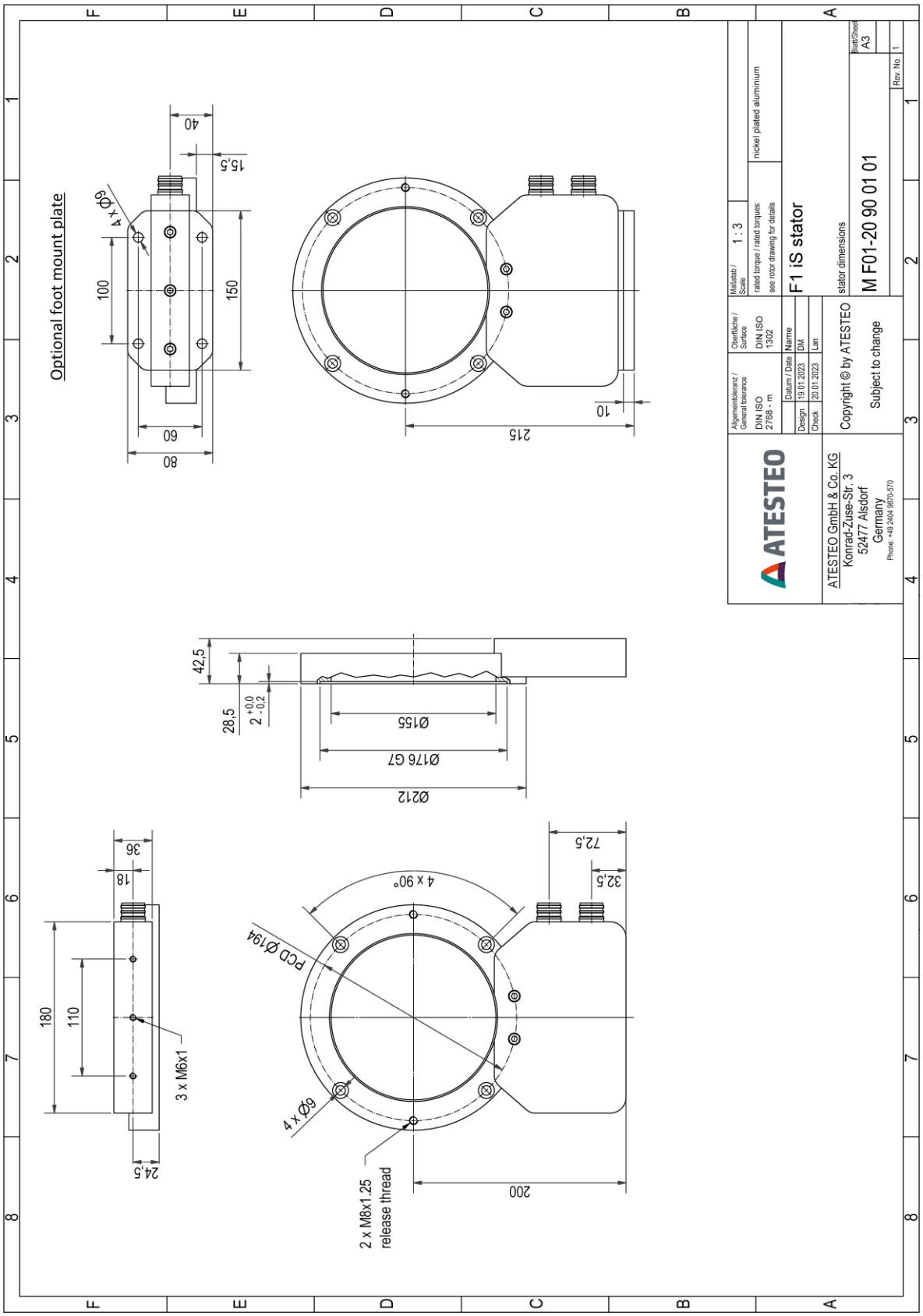

©2023, ATESTEO GmbH & Co. KG, This product data sheet was created on 03.27.2023.

The information contained in the product data sheet corresponds to the status quo at the time the document was created. ATESTEO continually further develops its products and reserves the right to make changes to the technical data. ATESTEO does not accept any liability for consequential losses arising from the use of this product data sheet or the information contained therein.

F1iS System SPD_MGN

Drawing

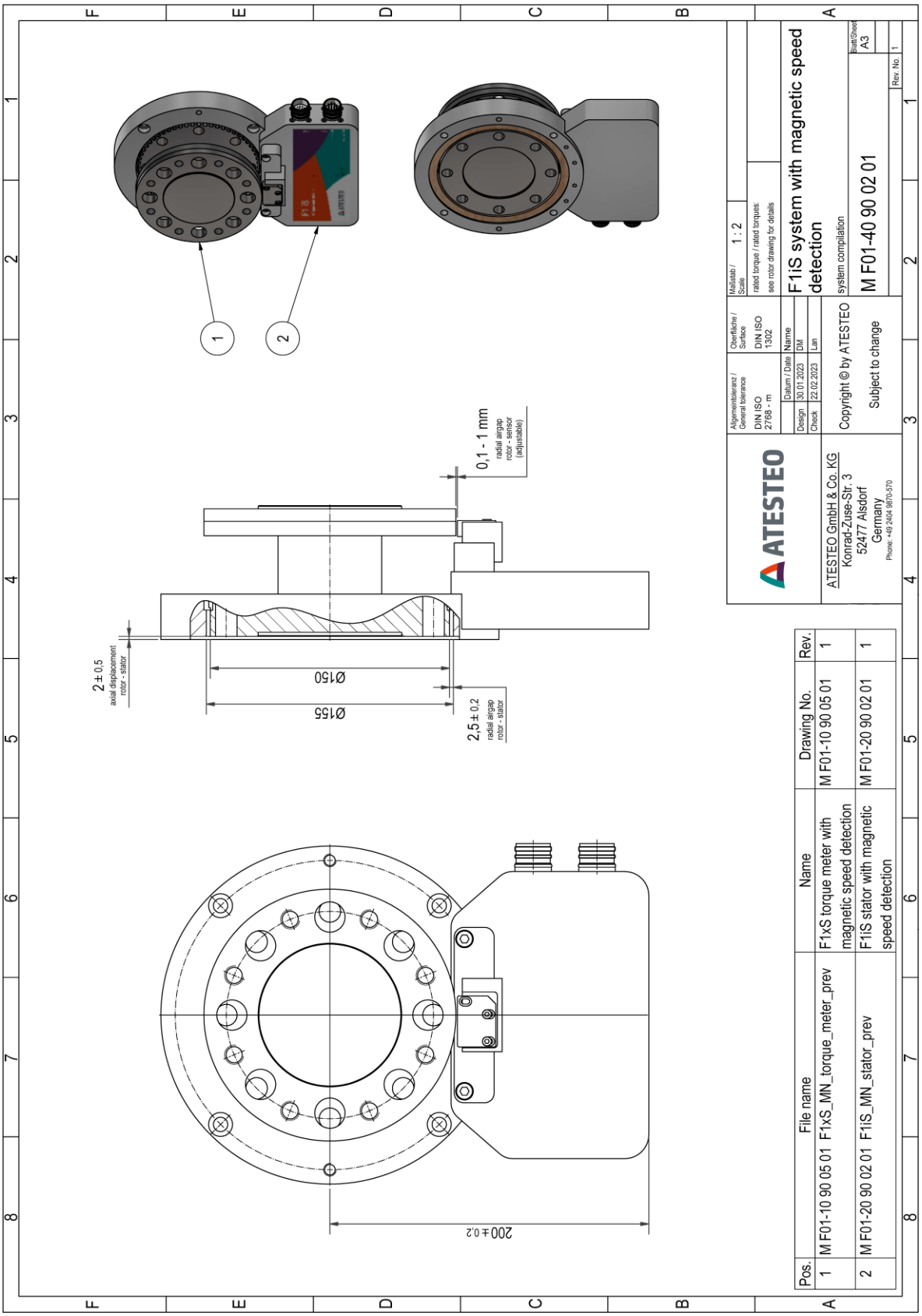

©2023, ATESTEO GmbH & Co. KG, This product data sheet was created on 03.27.2023.

The information contained in the product data sheet corresponds to the status quo at the time the document was created. ATESTEO continually further develops its products and reserves the right to make changes to the technical data. ATESTEO does not accept any liability for consequential losses arising from the use of this product data sheet or the information contained therein.

F1iS Rotor SPD_MGN

Drawing

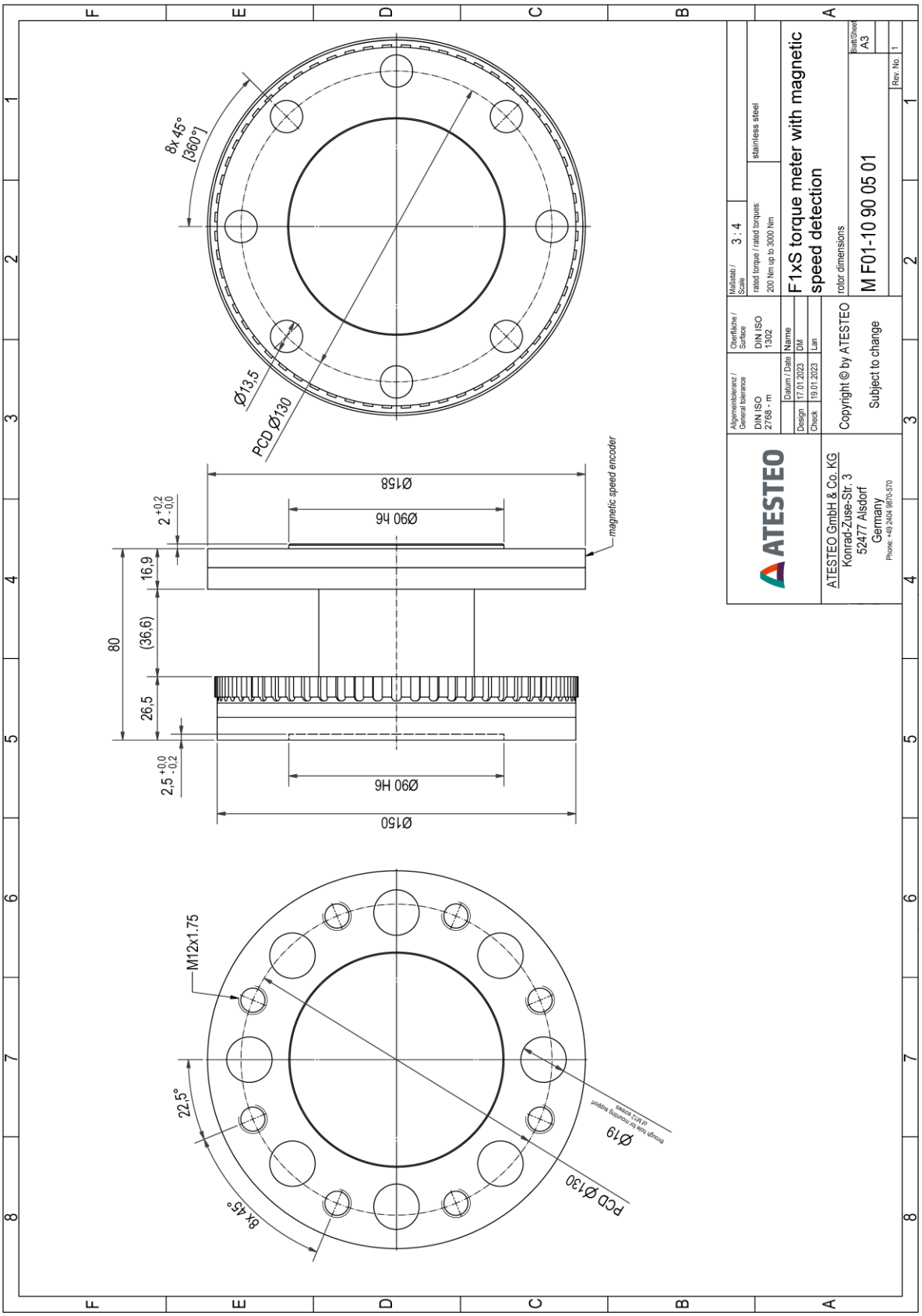

©2023, ATESTEO GmbH & Co. KG, This product data sheet was created on 03.27.2023.

The information contained in the product data sheet corresponds to the status quo at the time the document was created. ATESTEO continually further develops its products and reserves the right to make changes to the technical data. ATESTEO does not accept any liability for consequential losses arising from the use of this product data sheet or the information contained therein.

F1iS Stator SPD_MGN

Drawing

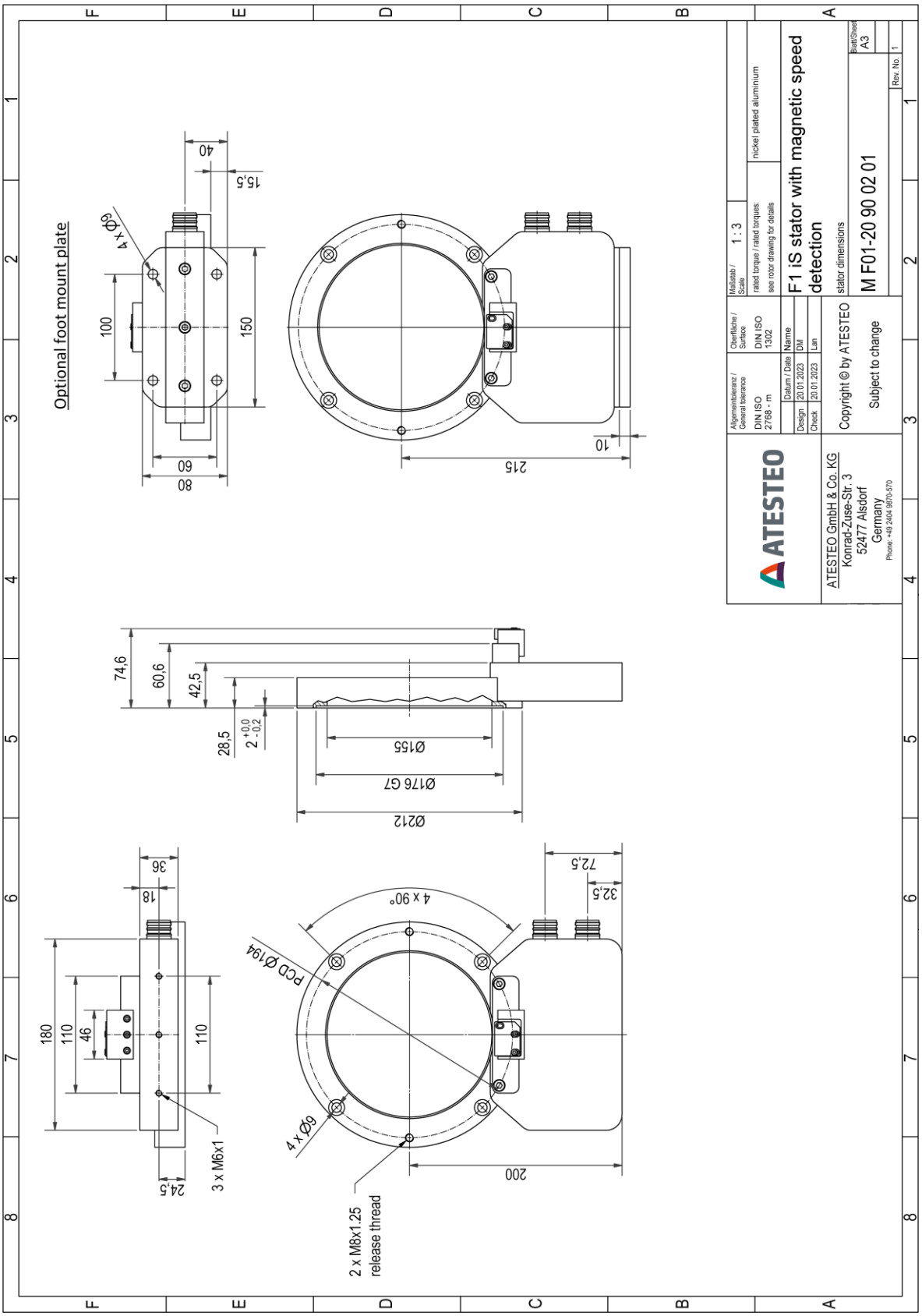

©2023, ATESTEO GmbH & Co. KG, This product data sheet was created on 03.27.2023.

The information contained in the product data sheet corresponds to the status quo at the time the document was created. ATESTEO continually further develops its products and reserves the right to make changes to the technical data. ATESTEO does not accept any liability for consequential losses arising from the use of this product data sheet or the information contained therein.

Drawing

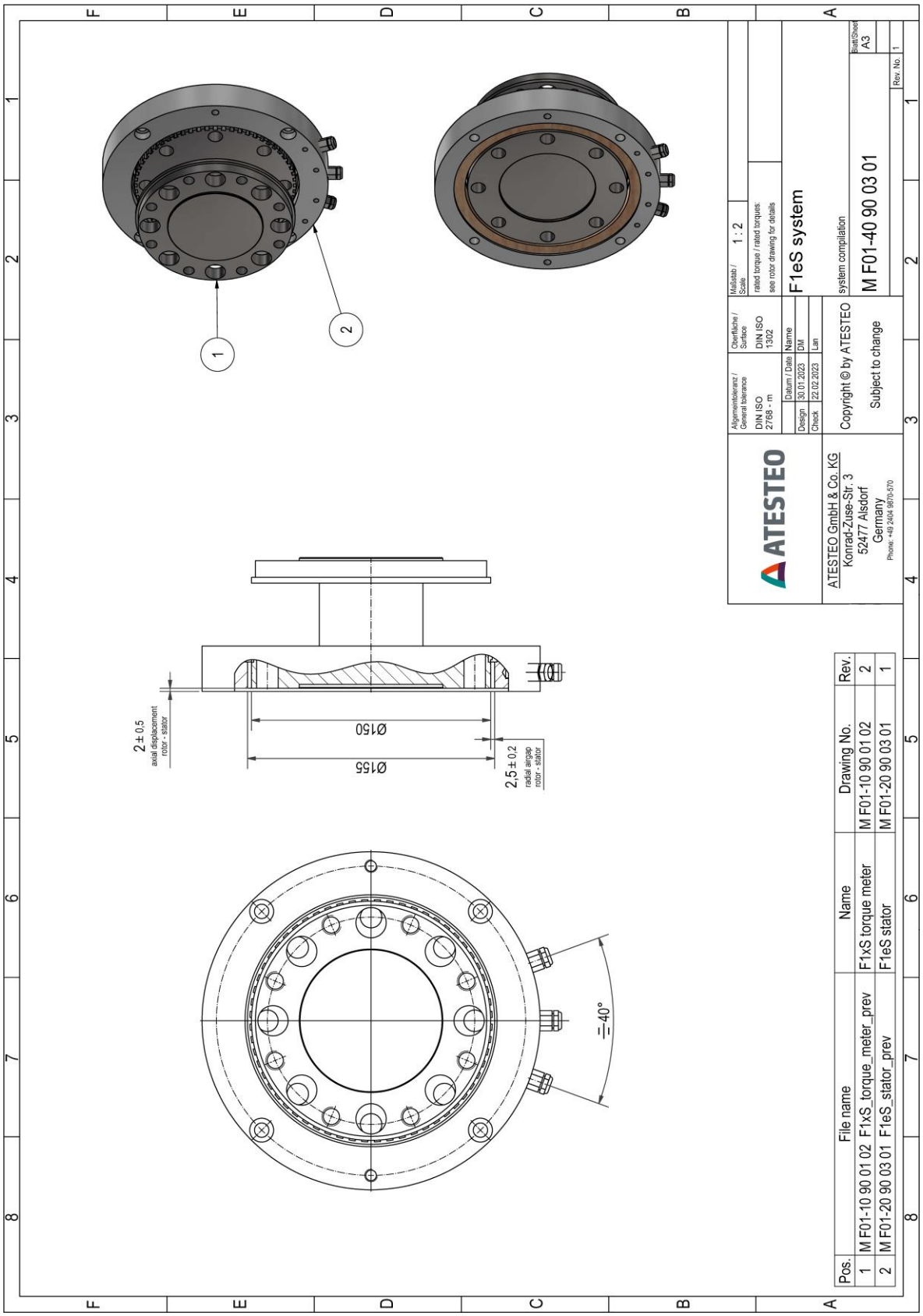

©2023, ATESTEO GmbH & Co. KG, This product data sheet was created on 03.27.2023.

The information contained in the product data sheet corresponds to the status quo at the time the document was created. ATESTEO continually further develops its products and reserves the right to make changes to the technical data. ATESTEO does not accept any liability for consequential losses arising from the use of this product data sheet or the information contained therein.

F1eS Rotor

Drawing

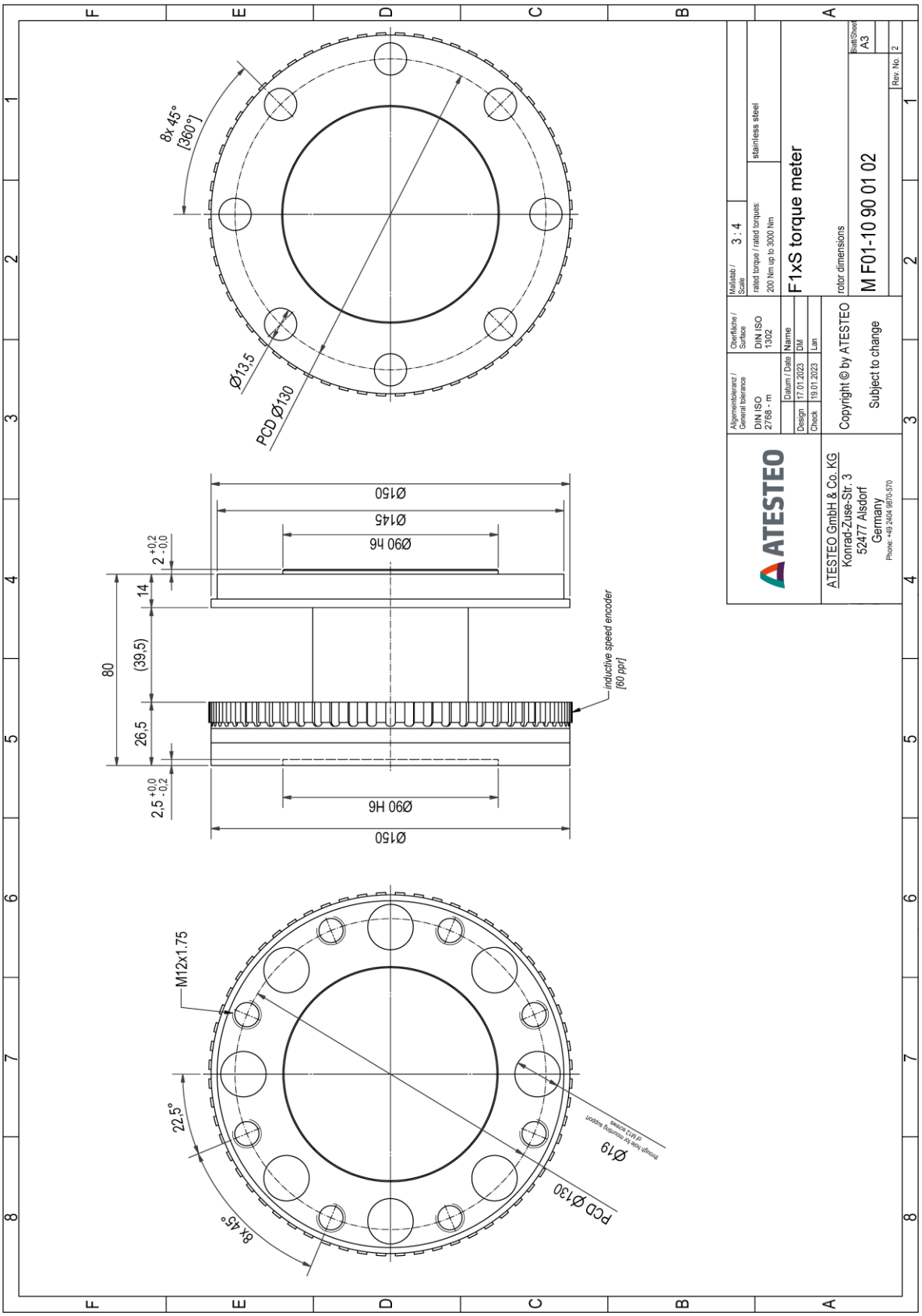

©2023, ATESTEO GmbH & Co. KG, This product data sheet was created on 03.27.2023.

The information contained in the product data sheet corresponds to the status quo at the time the document was created. ATESTEO continually further develops its products and reserves the right to make changes to the technical data. ATESTEO does not accept any liability for consequential losses arising from the use of this product data sheet or the information contained therein.

F1eS Stator

Drawing

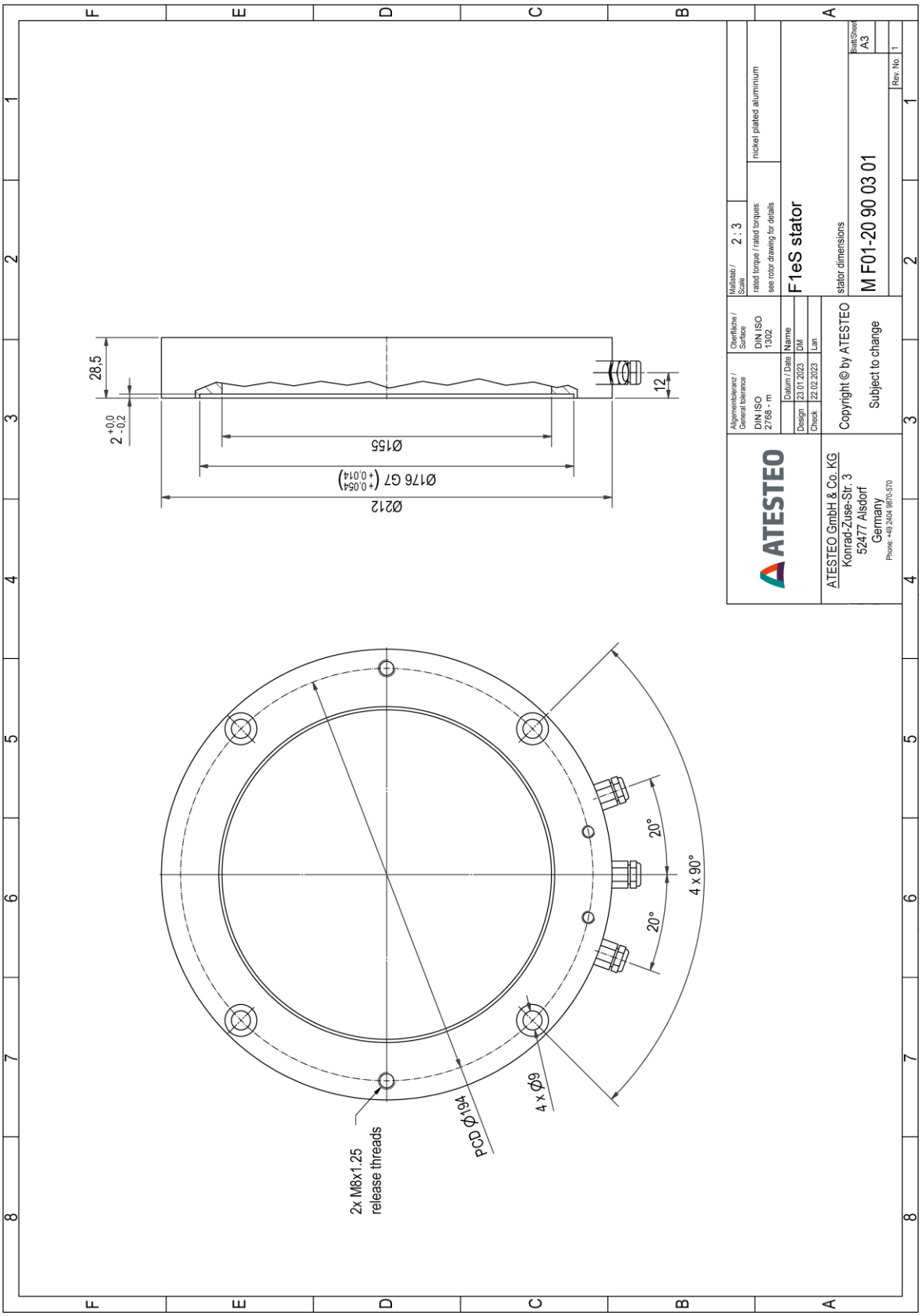

©2023, ATESTEO GmbH & Co. KG, This product data sheet was created on 03.27.2023.

The information contained in the product data sheet corresponds to the status quo at the time the document was created. ATESTEO continually further develops its products and reserves the right to make changes to the technical data. ATESTEO does not accept any liability for consequential losses arising from the use of this product data sheet or the information contained therein.

F1eS System SPD_MGN

Drawing

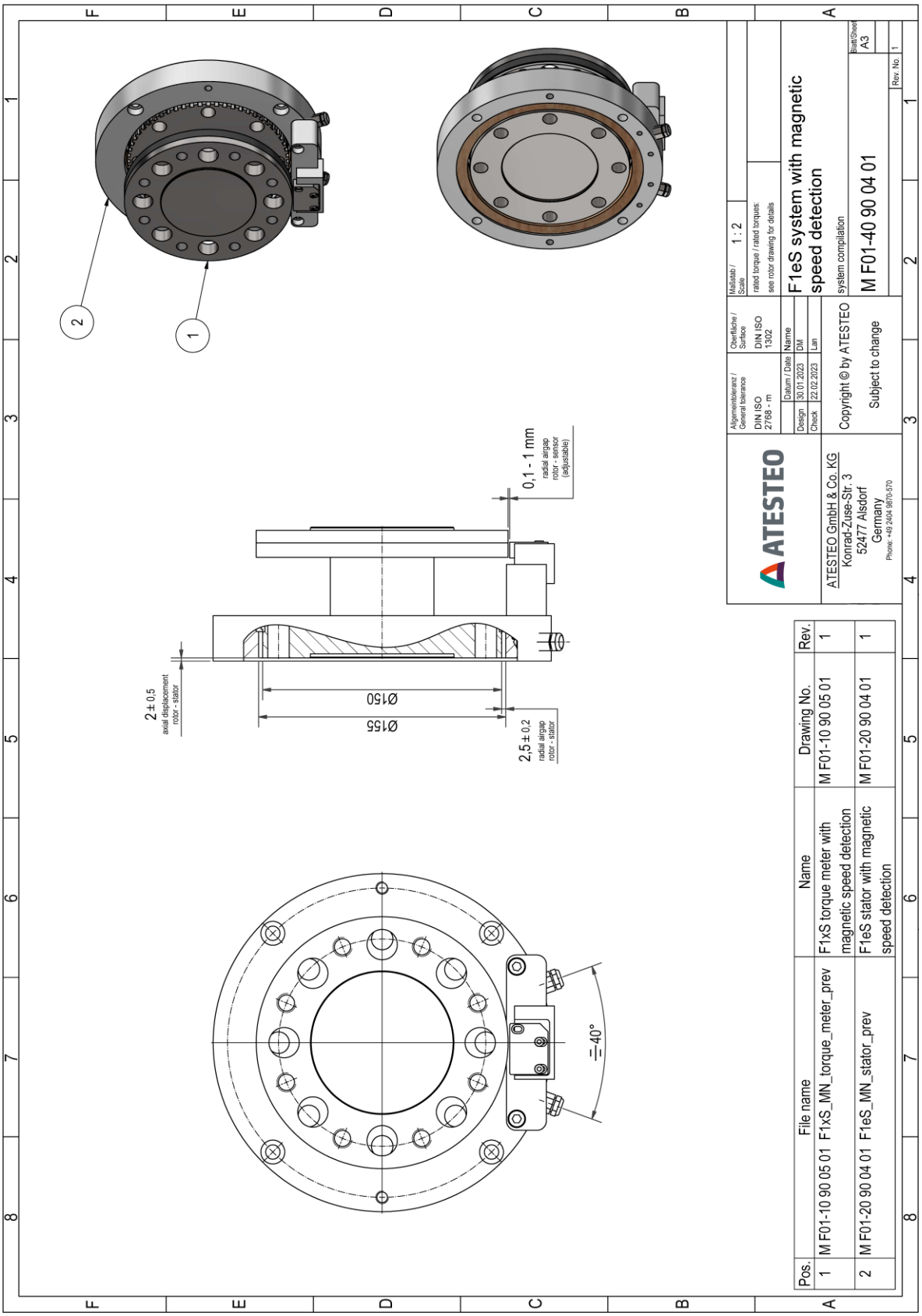

©2023, ATESTEO GmbH & Co. KG, This product data sheet was created on 03.27.2023.

The information contained in the product data sheet corresponds to the status quo at the time the document was created. ATESTEO continually further develops its products and reserves the right to make changes to the technical data. ATESTEO does not accept any liability for consequential losses arising from the use of this product data sheet or the information contained therein.

F1eS Rotor SPD_MGN

Drawing

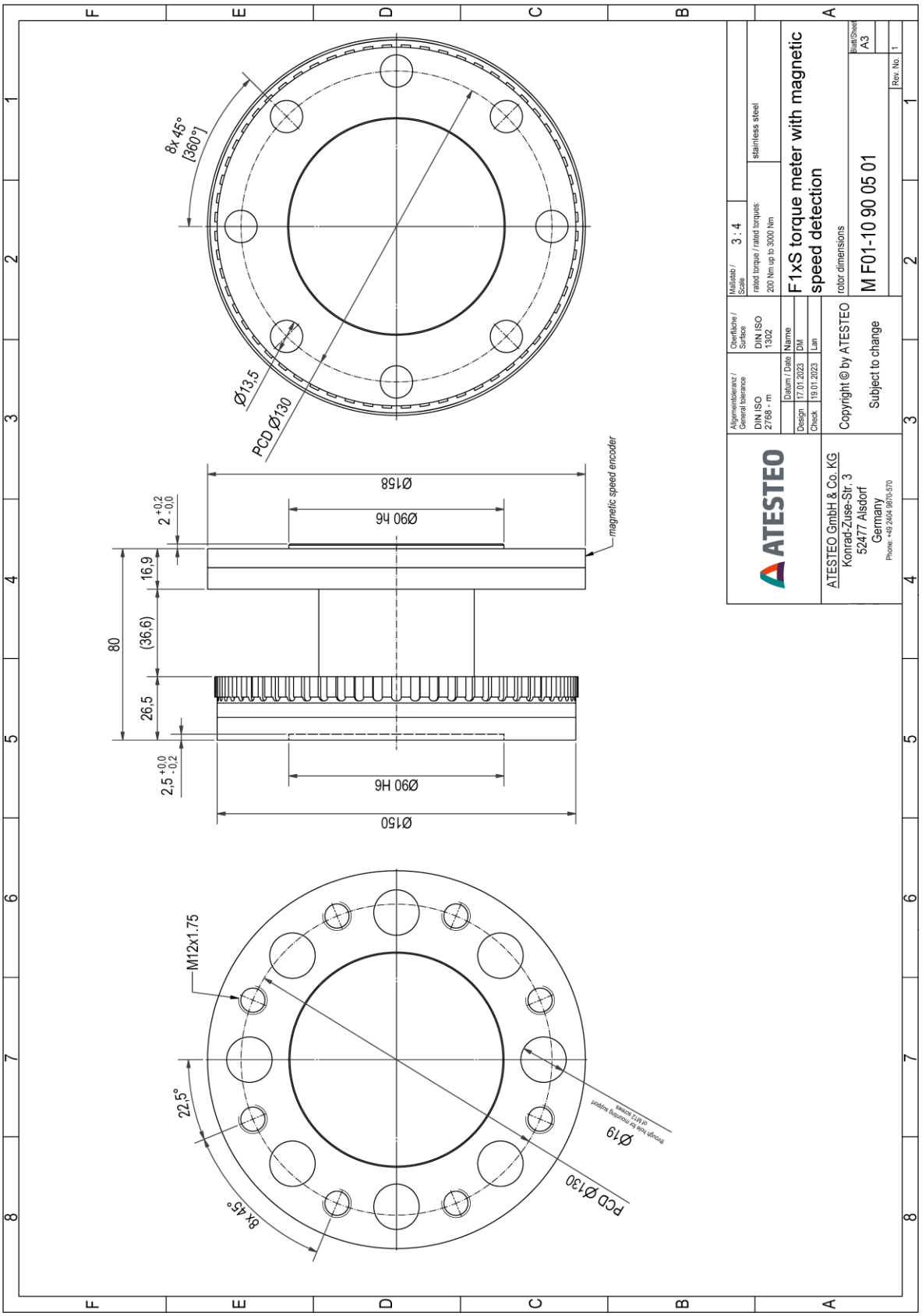

©2023, ATESTEO GmbH & Co. KG, This product data sheet was created on 03.27.2023.

The information contained in the product data sheet corresponds to the status quo at the time the document was created. ATESTEO continually further develops its products and reserves the right to make changes to the technical data. ATESTEO does not accept any liability for consequential losses arising from the use of this product data sheet or the information contained therein.

F1eS Stator SPD_MGN

Drawing

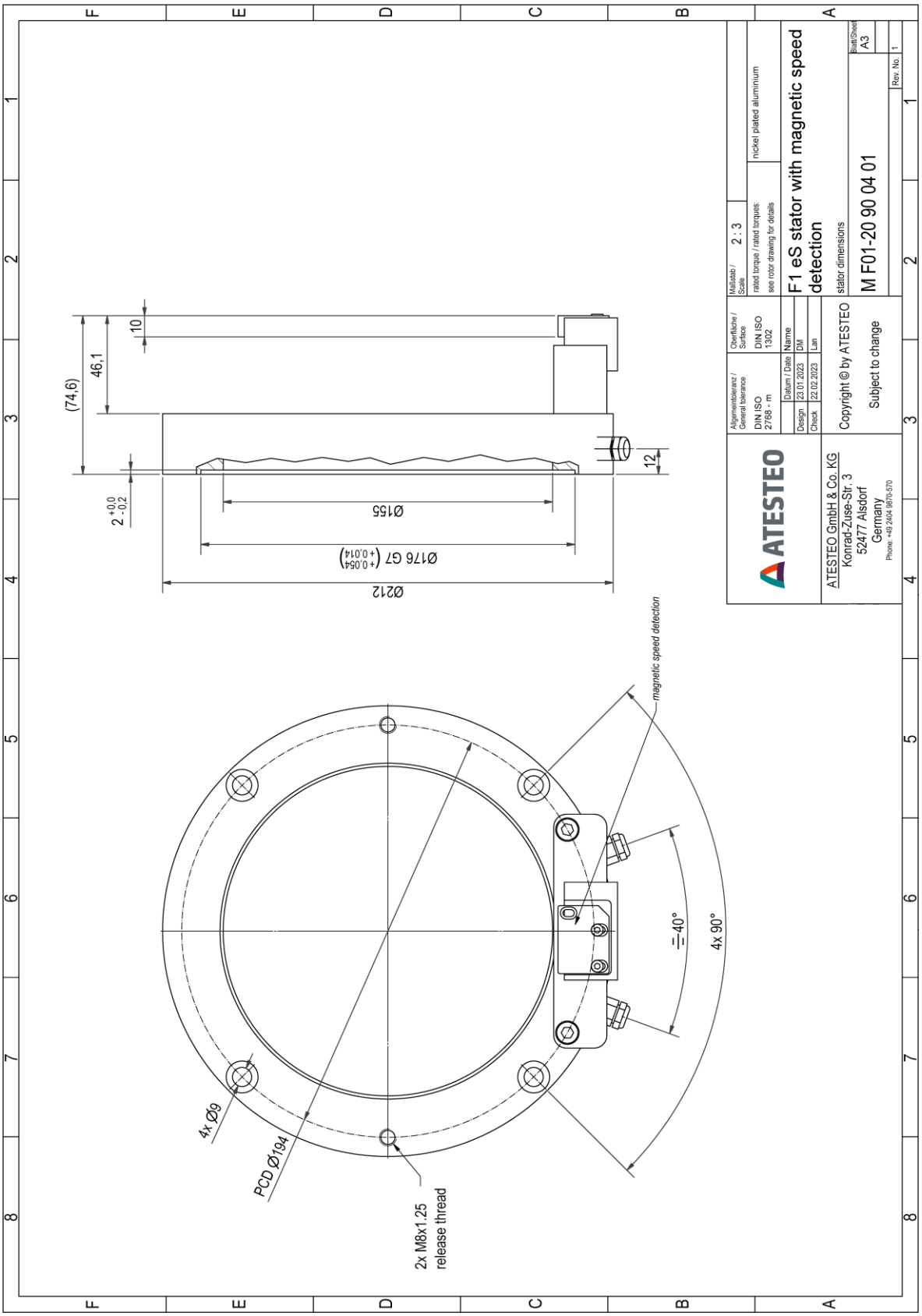

©2023, ATESTEO GmbH & Co. KG, This product data sheet was created on 03.27.2023.

The information contained in the product data sheet corresponds to the status quo at the time the document was created. ATESTEO continually further develops its products and reserves the right to make changes to the technical data. ATESTEO does not accept any liability for consequential losses arising from the use of this product data sheet or the information contained therein.

Drawing

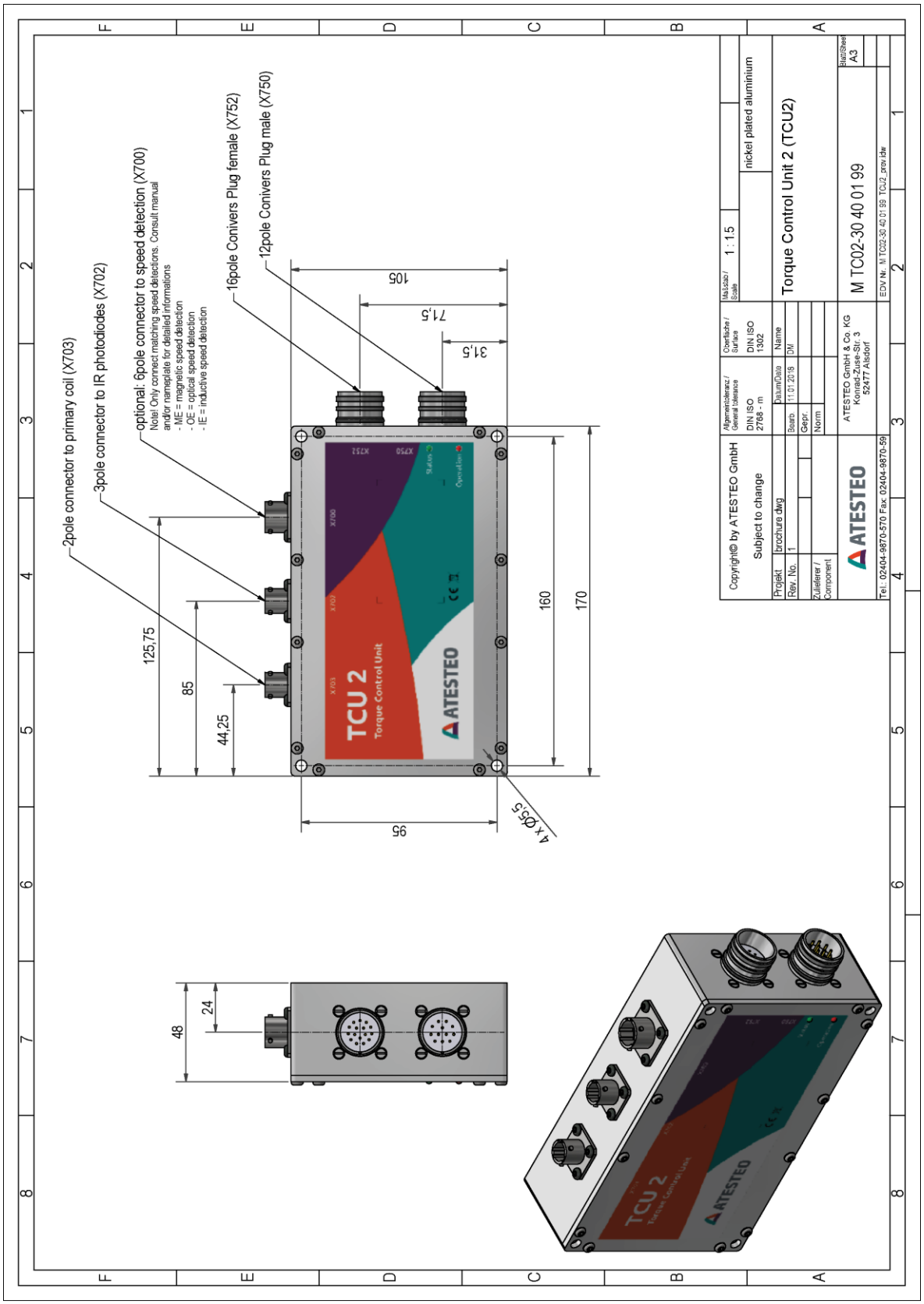

©2023, ATESTEO GmbH & Co. KG, This product data sheet was created on 03.27.2023.

The information contained in the product data sheet corresponds to the status quo at the time the document was created. ATESTEO continually further develops its products and reserves the right to make changes to the technical data. ATESTEO does not accept any liability for consequential losses arising from the use of this product data sheet or the information contained therein.

ATESTEO
Excellence in drivetrain testing

Would you like to learn more about our products, solutions, and services in the area of measuring systems, vehicle equipment, and actuators? Just call us at +49 (0) 2404 9870 570 or send email to equipment@atesteo.com. Your personal ATESTEO contact would be pleased to assist you.

TÜV SÜD

DAkkS Deutsche Akkreditierungsstelle

ATESTEO GmbH & Co. KG
Konrad-Zuse-Straße 3
52477 Alsdorf
Germany

Phone +49 (0) 2404 9870 - 0
Email info@atesteo.com

Instrumentation Devices

Instrumentation Devices Srl
Via Acquanera 29 - 22100 COMO (Italy)
ph +39 031 525 391- fax +39 031 507 984
info@instrumentation.it - www.instrumentation.it