ATESTEO
Excellence in drivetrain testing

**Data sheet**

# FxiS / FxeS

Instrumentation Devices Srl
Via Acquanera 29 - 22100 COMO (Italy)
ph +39 031 525 391- fax +39 031 507 984
info@instrumentation.it - www.instrumentation.it

## Technical data

| Type | - | F2iS | F2iS | F2eS | F2eS |
|---|---|---|---|---|---|
| Accuracy class | % | ≤±0.05 | | | |
| Rated torque ($Md_n$) | Nm | 2,500<br>5,000<br>7,000 | 10,000<br>15,000<br>20,000 | 2,500<br>5,000<br>7,000 | 10,000<br>15,000<br>20,000 |
| **Torque measuring system** | | | | | |
| Technology | - | Rotating | | | |
| Rated torque ($Md_n$) #1 | Nm | 2,500<br>5,000<br>7,000 | 10,000<br>15,000<br>20,000 | 2,500<br>5,000<br>7,000 | 10,000<br>15,000<br>20,000 |
| Rated torque short measurement range (optional, minimum) ($Md_{ns}$) #2 | Nm | 500<br>1,000<br>2,000 | 2,000<br>3,000<br>4,000 | 500<br>1,000<br>2,000 | 2,000<br>3,000<br>4,000 |
| Accuracy class extended (for $Md_n$) | % | ≤±0.03 | | | |
| Outputs | - | Frequency, Voltage, Current, CAN bus, Alert | | | |
| Test signal | - | see test report | | | |
| **Mechanical dimensions #3** | | | | | |
| Outer diameter of rotor #4 | mm | 230 | | | |
| Lengths (Rotor, without centering) | mm | 107 | | | |
| Pitch circle diameter #5 | mm | 196.0 | | | |
| **Speeds and speed measuring systems** | | | | | |
| Speed detection (integrated) | - | inductive | | | |
| Speed detection (optional) | - | magn. | | | |
| Maximum Speed without speed detection system | rpm | 15,000 | | | |
| Optional increased speed | rpm | 17,000 | | | |
| Maximum speed with magnetic speed encoder | rpm | 6,500 | | | |
| Maximum speed with optical speed encoder | rpm | N/A | | | |
| Maximum speed with inductive speed encoder | rpm | 12,500 | | | |
| **Torque accuracy class per output type (related to $Md_n$)** | | | | | |
| Frequency output | % | ≤±0.05 | | | |
| CAN output | % | ≤±0.05 | | | |
| Voltage output | % | ≤±0.10 | | | |
| Current output | % | ≤±0.10 | | | |
| Frequency output (option higher accuracy) | % | ≤±0.03 | | | |
| CAN (option higher accuracy) | % | ≤±0.03 | | | |

©2023, ATESTEO GmbH & Co. KG, This product data sheet was created on 06.20.2023.

The information contained in the product data sheet corresponds to the status quo at the time the document was created. ATESTEO continually further develops its products and reserves the right to make changes to the technical data. ATESTEO does not accept any liability for consequential losses arising from the use of this product data sheet or the information contained therein.

## Technical data

| Type | - | F2iS | F2iS | F2eS | F2eS |
|---|---|---|---|---|---|
| Accuracy class | % | ≤±0.05 | | | |
| Rated torque ($Md_n$) | Nm | 2,500<br>5,000<br>7,000 | 10,000<br>15,000<br>20,000 | 2,500<br>5,000<br>7,000 | 10,000<br>15,000<br>20,000 |

| Linearity deviation including hysteresis related to $Md_n$ #6 | | |
|---|---|---|
| Frequency, 0%...30% | % | ≤±0.010 |
| Frequency, 30%...60% | % | ≤±0.020 |
| Frequency, 60%...100% | % | ≤±0.030 |
| CAN, 0%...30% | % | ≤±0.010 |
| CAN, 30%...60% | % | ≤±0.020 |
| CAN, 60%...100% | % | ≤±0.030 |
| Voltage output | % | ≤±0.05 |
| Current output | % | ≤±0.05 |
| Rel. standard deviation of the reproducibility according to DIN 1319, by reference to variation of the output signal (rel. to $Md_n$) | | |
| Frequency output | % | ≤±0.03 |
| CAN output | % | ≤±0.03 |
| Voltage output | % | ≤±0.05 |
| Current output | % | ≤±0.05 |
| Temperature influence per 10K in the nominal temperature range on the output signal related to the actual value of signal span (rel. to $Md_n$) | | |
| Frequency output | % | ≤±0.05 |
| CAN output | % | ≤±0.05 |
| Voltage output | % | ≤±0.10 |
| Current output | % | ≤±0.10 |
| Temperature influence per 10K in the nominal temperature range on the zero signal (rel. to $Md_n$) | | |
| Frequency output | % | ≤±0.05 |
| CAN output | % | ≤±0.05 |
| Voltage output | % | ≤±0.10 |
| Current output | % | ≤±0.10 |
| Long-term drift over 48h at reference temperature | | |
| Voltage output | mV | <1.0 |
| Current output | µA | <0.80 |

©2023, ATESTEO GmbH & Co. KG, This product data sheet was created on 06.20.2023.

The information contained in the product data sheet corresponds to the status quo at the time the document was created. ATESTEO continually further develops its products and reserves the right to make changes to the technical data. ATESTEO does not accept any liability for consequential losses arising from the use of this product data sheet or the information contained therein.

## Technical data

| Type | - | F2iS | F2iS | F2eS | F2eS |
|---|---|---|---|---|---|
| Accuracy class | % | ≤±0.05 | | | |
| Rated torque ($Md_n$) | Nm | 2,500<br>5,000<br>7,000 | 10,000<br>15,000<br>20,000 | 2,500<br>5,000<br>7,000 | 10,000<br>15,000<br>20,000 |

| | | |
|---|---|---|
| **Nominal sensitivity (range between zero torque and rated torque)** | | |
| Frequency output | kHz | 20 |
| Voltage output | V | 5.0 / 10.0 / 2.5 / 5.0 |
| Current output | mA | 8 / 10 |
| **Output signal at zero torque** | | |
| Frequency output | kHz | 60 |
| Voltage output | V | 0.0 / 0.0 / 2.5 / 5.0 |
| Current output | mA | 12 / 10 |
| **Nominal output signal** | | |
| Frequency output at positive nominal value | kHz | 80 |
| Frequency output at negative nominal value | kHz | 40 |
| Voltage output at positive nominal value | V | 5 / 10 / 5 / 10 |
| Voltage output at negative nominal value | V | -5 / -10 / 0 / 0 |
| Current output at positive nominal value | mA | 20 / 20 |
| Current output at negative nominal value | mA | 4 / 0 |
| **Max. modulation range** | | |
| Frequency output | kHz | 30...90 |
| Voltage output | V | -10.5...10.5 |
| Current output | mA | 0...24 |
| **Group delay time (main TCU)** | | |
| Frequency output | µs | 10 |
| Voltage output | µs | 3,000 |
| CAN | µs | 1,000 |

©2023, ATESTEO GmbH & Co. KG, This product data sheet was created on 06.20.2023.

The information contained in the product data sheet corresponds to the status quo at the time the document was created. ATESTEO continually further develops its products and reserves the right to make changes to the technical data. ATESTEO does not accept any liability for consequential losses arising from the use of this product data sheet or the information contained therein.

## Technical data

| Type | - | F2iS | F2iS | F2eS | F2eS |
|---|---|---|---|---|---|
| Accuracy class | % | ≤±0.05 | | | |
| Rated torque ($Md_n$) | Nm | 2,500<br>5,000<br>7,000 | 10,000<br>15,000<br>20,000 | 2,500<br>5,000<br>7,000 | 10,000<br>15,000<br>20,000 |

| Speed measuring system | Inductive (track at rotor) | |
|---|---|---|
| Pulse per rev (PPR) | ppr. | 120 |
| Maximum speeds (related to PPR) | rpm | 12,500 |
| Max. output frequency (RS422) | kHz | 25 |
| Minimum speed for sufficient pulse stability | rpm | >2.5 |
| **Speed measuring system** | **Magneto resistive (2 tracks approx. 90 degree phase shifted)** | |
| Pulses per rev (PPR) | ppr. | 1,448 |
| Maximum speeds (related to PPR) | rpm | 6,500 |
| Max. output frequency (RS422) | kHz | 157 |
| Minimum speed for sufficient pulse stability | rpm | >0.2 |
| Nominal clearance (sensor - pole ring) | mm | 0.7 |
| Working airgap (sensor - pole ring) | mm | 0.1...1.0 |
| Nominal axial displacement (rotor - stator) #7 | mm | 4.0 |
| Tolerance to nominal axial displacement (rotor - stator) | mm | ±0.5 |
| **Speed measuring system** | **Optical** | |
| Pulses per rev (PPR) | ppr. | N/A |
| Maximum speeds (related to PPR) | rpm | N/A |
| Max. output frequency (RS422) | kHz | N/A |
| Minimum speed for sufficient pulse stability | rpm | N/A |
| Nominal radial displacement (rotor - stator) | mm | N/A |
| Tolerated radial displacement (rotor - stator) #7 | mm | N/A |
| Nominal axial displacement (rotor - stator) #7 | mm | N/A |
| Tolerance to nominal axial displacement (rotor - stator) | mm | N/A |

©2023, ATESTEO GmbH & Co. KG, This product data sheet was created on 06.20.2023.

The information contained in the product data sheet corresponds to the status quo at the time the document was created. ATESTEO continually further develops its products and reserves the right to make changes to the technical data. ATESTEO does not accept any liability for consequential losses arising from the use of this product data sheet or the information contained therein.

## Technical data

| Type | - | F2iS | F2iS | F2eS | F2eS |
|---|---|---|---|---|---|
| Accuracy class | % | ≤±0.05 | | | |
| Rated torque ($Md_n$) | Nm | 2,500<br>5,000<br>7,000 | 10,000<br>15,000<br>20,000 | 2,500<br>5,000<br>7,000 | 10,000<br>15,000<br>20,000 |

| Angular measuring system | | |
|---|---|---|
| Pulses per rev | ppr | N/A |
| Resolution | ° | N/A |
| Output signals | - | N/A |
| Measurement ranges | ° | N/A |

©2023, ATESTEO GmbH & Co. KG, This product data sheet was created on 06.20.2023.

The information contained in the product data sheet corresponds to the status quo at the time the document was created. ATESTEO continually further develops its products and reserves the right to make changes to the technical data. ATESTEO does not accept any liability for consequential losses arising from the use of this product data sheet or the information contained therein.

## Technical data

| Type | - | F2iS | F2iS | F2eS | F2eS |
|---|---|---|---|---|---|
| Accuracy class | % | ≤±0.05 | | | |
| Rated torque ($Md_n$) | Nm | 2,500<br>5,000<br>7,000 | 10,000<br>15,000<br>20,000 | 2,500<br>5,000<br>7,000 | 10,000<br>15,000<br>20,000 |
| **Temperature ranges** | | | | | |
| Nominal temperature range *(Rotor)* | °C | 0...80 | | | |
| Operating temperature range *(Rotor)* *#8* | °C | -20...85 | | | |
| Storage temperature range *(Rotor)* | °C | -30...85 | | | |
| Nominal temperature range *(Stator)* | °C | 0...70 | 0...70 | 0...80 | 0...80 |
| Operating temperature range *(Stator)* *#9* | °C | -20...70 | -20...70 | -20...85 | -20...85 |
| Storage temperature range *(Stator)* | °C | -30...85 | | | |
| Nominal temperature range *(TCU)* | °C | N/A | N/A | 0...70 | 0...70 |
| Operating temperature range *(TCU)* | °C | N/A | N/A | -20...70 | -20...70 |
| Storage temperature range *(TCU)* | °C | N/A | N/A | -30...85 | -30...85 |
| **Mechanical shock (EN 60068-2-27)** | | | | | |
| Quantity | - | 1,000 | | | |
| Duration | ms | 3 | | | |
| Acceleration | m/s² | 650 | | | |
| **Vibration load (EN 60068-2-6)** | | | | | |
| Frequency | Hz | 10...2,000 | | | |
| Duration | min. | 150 | | | |
| Acceleration | m/s² | 200 | | | |
| **Load limits #10** | | | | | |
| Limit torque, related to $Md_n$ | % | 500 | | | |
| Breaking torque approx., related to $Md_n$ | % | 1,000 | | | |
| Axial limit force | kN | 59.50<br>81.50<br>114.00 | 114.00<br>209.00<br>271.00 | 59.50<br>81.50<br>114.00 | 114.00<br>209.00<br>271.00 |
| Lateral limit force | N | 5,280.00<br>9,390.00<br>16,360.00 | 16,360.00<br>34,930.00<br>46,930.00 | 5,280.00<br>9,390.00<br>16,360.00 | 16,360.00<br>34,930.00<br>46,930.00 |
| Bending limit torque | Nm | 406.00<br>723.00<br>1,260.00 | 1,260.00<br>2,690.00<br>3,610.00 | 406.00<br>723.00<br>1,260.00 | 1,260.00<br>2,690.00<br>3,610.00 |

©2023, ATESTEO GmbH & Co. KG, This product data sheet was created on 06.20.2023.

The information contained in the product data sheet corresponds to the status quo at the time the document was created. ATESTEO continually further develops its products and reserves the right to make changes to the technical data. ATESTEO does not accept any liability for consequential losses arising from the use of this product data sheet or the information contained therein.

## Technical data

| Type | - | F2iS | F2iS | F2eS | F2eS |
|---|---|---|---|---|---|
| Accuracy class | % | ≤±0.05 | | | |
| Rated torque ($Md_n$) | Nm | 2,500<br>5,000<br>7,000 | 10,000<br>15,000<br>20,000 | 2,500<br>5,000<br>7,000 | 10,000<br>15,000<br>20,000 |
| **Mechanical values** | | | | | |
| Torsional stiffness | kNm/rad | 942<br>1,771<br>3,345 | 3,345<br>9,020<br>13,050 | 942<br>1,771<br>3,345 | 3,345<br>9,020<br>13,050 |
| Angle of twist at $Md_n$ | ° | 0.152<br>0.162<br>0.120 | 0.171<br>0.095<br>0.088 | 0.152<br>0.162<br>0.120 | 0.171<br>0.095<br>0.088 |
| Axial stiffness | kN/mm | 1,497<br>2,042<br>2,853 | 2,853<br>5,226<br>6,783 | 1,497<br>2,042<br>2,853 | 2,853<br>5,226<br>6,783 |
| Radial stiffness | kN/mm | 264<br>469<br>818 | 818<br>1,746<br>2,346 | 264<br>469<br>818 | 818<br>1,746<br>2,346 |
| Bending stiffness | kNm/° | N/A | | | |
| Deflection at axial limit force | mm | <0.05 | | | |
| Additional radial deviation at lateral limit force | mm | <0.03 | | | |
| Parallel deviation at bending limit torque | mm | <0.07<br><0.07<br><0.06 | <0.06<br><0.05<br><0.05 | <0.07<br><0.07<br><0.06 | <0.06<br><0.05<br><0.05 |
| Inherent frequency | Hz | 650<br>850<br>1,200 | 1,200<br>1,800<br>2,200 | 650<br>850<br>1,200 | 1,200<br>1,800<br>2,200 |
| Balance quality-level (DIN ISO 1949) | - | G2.5 | | | |
| Inertia of rotor | kgm² | 0.0788<br>0.0792<br>0.0799 | 0.0799<br>0.0827<br>0.0848 | 0.0788<br>0.0792<br>0.0799 | 0.0799<br>0.0827<br>0.0848 |
| Max. limits for relative shaft vibration (peak to peak) #11 | µm | $S_{(p-p)} = \frac{9000}{\sqrt{n}}$ | | | |

©2023, ATESTEO GmbH & Co. KG, This product data sheet was created on 06.20.2023.

The information contained in the product data sheet corresponds to the status quo at the time the document was created. ATESTEO continually further develops its products and reserves the right to make changes to the technical data. ATESTEO does not accept any liability for consequential losses arising from the use of this product data sheet or the information contained therein.

## Technical data

| Type | - | F2iS | F2iS | F2eS | F2eS |
|---|---|---|---|---|---|
| Accuracy class | % | ≤±0.05 | | | |
| Rated torque ($Md_n$) | Nm | 2,500<br>5,000<br>7,000 | 10,000<br>15,000<br>20,000 | 2,500<br>5,000<br>7,000 | 10,000<br>15,000<br>20,000 |
| **Weight approx.** | | | | | |
| Rotor #12 | kg | 13.0<br>13.4<br>14.0 | 14.0<br>15.0<br>15.8 | 13.0<br>13.4<br>14.0 | 14.0<br>15.0<br>15.8 |
| Stator (without speed encoder) #12 | kg | 3.00 | 3.00 | 3.20 | 3.20 |
| **Mounting distances (without optional speed detection system)** | | | | | |
| Nominal radial displacement (rotor - stator) | mm | 2.5 | | | |
| Tolerance to nominal radial displacement (rotor - stator) | mm | ≤±0.2 | | | |
| Nominal axial displacement (rotor - stator) #7 | mm | 4 | | | |
| Tolerance to nominal axial displacement (rotor - stator) | mm | ≤±0.5 | | | |
| **Flatness and concentricity tolerances rotor** | | | | | |
| Circular run-out-axial tolerance #13 | mm | 0.01 | | | |
| Circular run-out-radial tolerance #13 | mm | 0.01 | | | |
| **Power supply** | | | | | |
| Nominal supply | V (DC) | 24 | | | |
| Supply range #14 | V (DC) | 23...25 | | | |
| Max. current consumption in measuring mode | A | <0.70 | | | |
| Max. current consumption in start-up mode | A | <2 | | | |
| Nominal power consumption | W | <17 | | | |
| **Load resistance** | | | | | |
| Frequency output | - | RS422 | | | |
| Voltage output | kOhm | ≥5 | | | |
| **Dynamic** | | | | | |
| Frequency output | kHz | ≤7 | | | |
| Voltage output | kHz | ≤1 | | | |
| Current output | kHz | ≤1 | | | |
| CAN output conversation rate | 1/s | ≤1,000 | | | |

©2023, ATESTEO GmbH & Co. KG, This product data sheet was created on 06.20.2023.

The information contained in the product data sheet corresponds to the status quo at the time the document was created. ATESTEO continually further develops its products and reserves the right to make changes to the technical data. ATESTEO does not accept any liability for consequential losses arising from the use of this product data sheet or the information contained therein.

## Technical data

| Type | - | F2iS | F2iS | F2eS | F2eS |
|---|---|---|---|---|---|
| Accuracy class | % | ≤±0.05 | | | |
| Rated torque ($Md_n$) | Nm | 2,500<br>5,000<br>7,000 | 10,000<br>15,000<br>20,000 | 2,500<br>5,000<br>7,000 | 10,000<br>15,000<br>20,000 |
| **Miscellaneous** | | | | | |
| Protection class (rotor) | - | IP54 | | | |
| Protection class (stator) | - | IP54 | | | |
| Protection class (rotor, extended) | - | On request | | | |
| Protection class (stator, extended) | - | On request | | | |
| Pitch circle screw information | - | 16 * M16<br>(8.8) | 16 * M16<br>(10.9)<br>16 * M16<br>(12.9)<br>16 * M18<br>(12.9) | 16 * M16<br>(8.8) | 16 * M16<br>(10.9)<br>16 * M16<br>(12.9)<br>16 * M18<br>(12.9) |
| CAN | - | 2B | | | |
| Configuration interface | - | RS232 | | | |
| Central hole | mm | 15 (optional) | | | |
| Material | - | Steel | | | |
| Measuring range (related to $Md_n$) | % | 120 | | | |
| Compatible evaluation units (TCU) | - | Integrated | Integrated | TCU2 | TCU2 |
| Stator type | - | iS | iS | eS | eS |
| **Sales information** | | | | | |
| Article number | - | 10000049<br>10000049<br>10003597 | 10003597<br>10000729<br>10000729 | 10000903<br>10000903<br>10003607 | 10003607<br>10003608<br>10003608 |
| U.S. FCC certificate | | Not required | | | |

©2023, ATESTEO GmbH & Co. KG, This product data sheet was created on 06.20.2023.

The information contained in the product data sheet corresponds to the status quo at the time the document was created. ATESTEO continually further develops its products and reserves the right to make changes to the technical data. ATESTEO does not accept any liability for consequential losses arising from the use of this product data sheet or the information contained therein.

## Remarks and information

| Link no. | Topic | Remark |
|---|---|---|
| #1 | Nominal torque | Based on customer requests, the measurement systems can optionally be optimized for not listed nominal torque values (intermediate ranges possible). |
| #2 | Second torque range | The written second nominal torque value ($Md_{ns}$) is the smallest possible. Greater second torque ranges can be chosen on demand.<br><br>Mechanical values and load limits vary between single and dual range torque meters. A data sheet for dual range torque meters with specific values can be requested. |
| #3 | Dimensions | Mechanical dimensions are without engagement. Use the drawings and step files as master for your constructions. |
| #4 | Detail in the drawings | Value can vary by optional components. Please find details to this attribute in the integrated drawings. |
| #5 | Pitch circle diameter | The pitch circle diameter is identically at input and output side for most systems. More information is given in the drawings of a product. |
| #6 | Linearity | Values of Linearity deviation incl. Hysteresis can only be reached if positive and negative sensitivity values are used. |
| #7 | Reference planes | Please check the drawings for information about the reference planes of this attribute. |
| #8 | Temperature range (rotor) | No condensation allowed. |
| #9 | Temperature range (stator) | No condensation allowed. Temperature related to housing ground point. |
| #10 | Load limits | The given values are only valid if no other load occurs at the same time. If the loads in sum are 100%, the max. error will be 0.3% of the nominal torque. |

©2023, ATESTEO GmbH & Co. KG, This product data sheet was created on 06.20.2023.

The information contained in the product data sheet corresponds to the status quo at the time the document was created. ATESTEO continually further develops its products and reserves the right to make changes to the technical data. ATESTEO does not accept any liability for consequential losses arising from the use of this product data sheet or the information contained therein.

## Remarks and information

| Link no. | Topic | Remark |
|---|---|---|
| #11 | Vibration limits | Vibration limits are not an influence to the machine. They reflect the allowed effect onto the rotor (ISO 7919-3). Parameter "n" is given in "r/min.". |
| #12 | Weights | Weights are related to components without options like speed detection system. Please contact us for exact weight information of options. |
| #13 | Flatness and concentricity tolerances | The parameters of "Flatness and concentricity tolerances rotor" are manufacturing tolerances. |
| #14 | Supply voltage | The supply voltage range must be given at measurement system side. Long wires can reduce the voltage level from power supply to measurement system. |

©2023, ATESTEO GmbH & Co. KG, This product data sheet was created on 06.20.2023.

The information contained in the product data sheet corresponds to the status quo at the time the document was created. ATESTEO continually further develops its products and reserves the right to make changes to the technical data. ATESTEO does not accept any liability for consequential losses arising from the use of this product data sheet or the information contained therein.

## Drawing

iS

Rotor & stator with integrated evaluation unit (TCU)
Rotor & Stator mit integrierter Auswerteeinheit (TCU)

eS

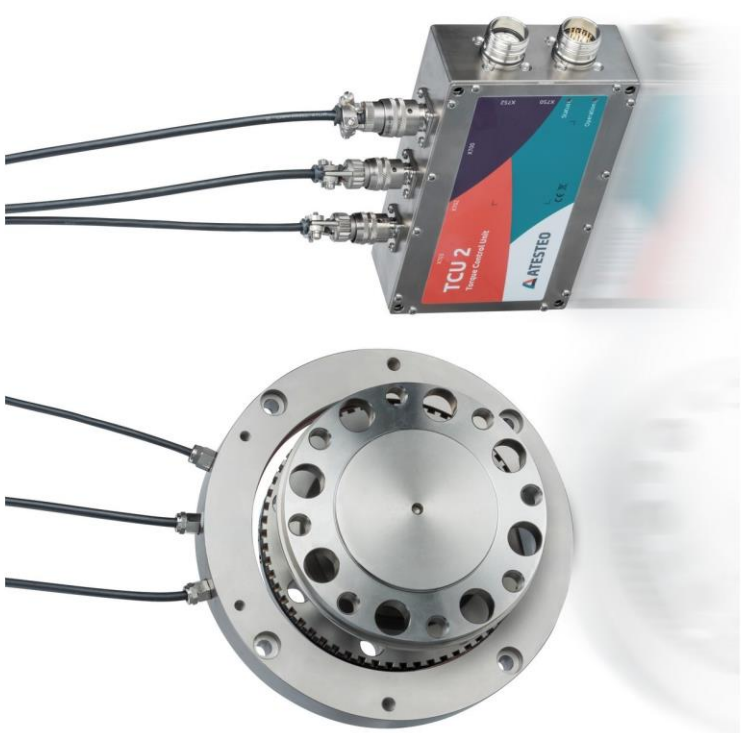


Rotor, ring stator & external evaluation unit (TCU)
Rotor, Ringstator & abgesetzte Auswerteeinheit (TCU)

©2023, ATESTEO GmbH & Co. KG, This product data sheet was created on 06.20.2023.

The information contained in the product data sheet corresponds to the status quo at the time the document was created. ATESTEO continually further develops its products and reserves the right to make changes to the technical data. ATESTEO does not accept any liability for consequential losses arising from the use of this product data sheet or the information contained therein.

## Drawing

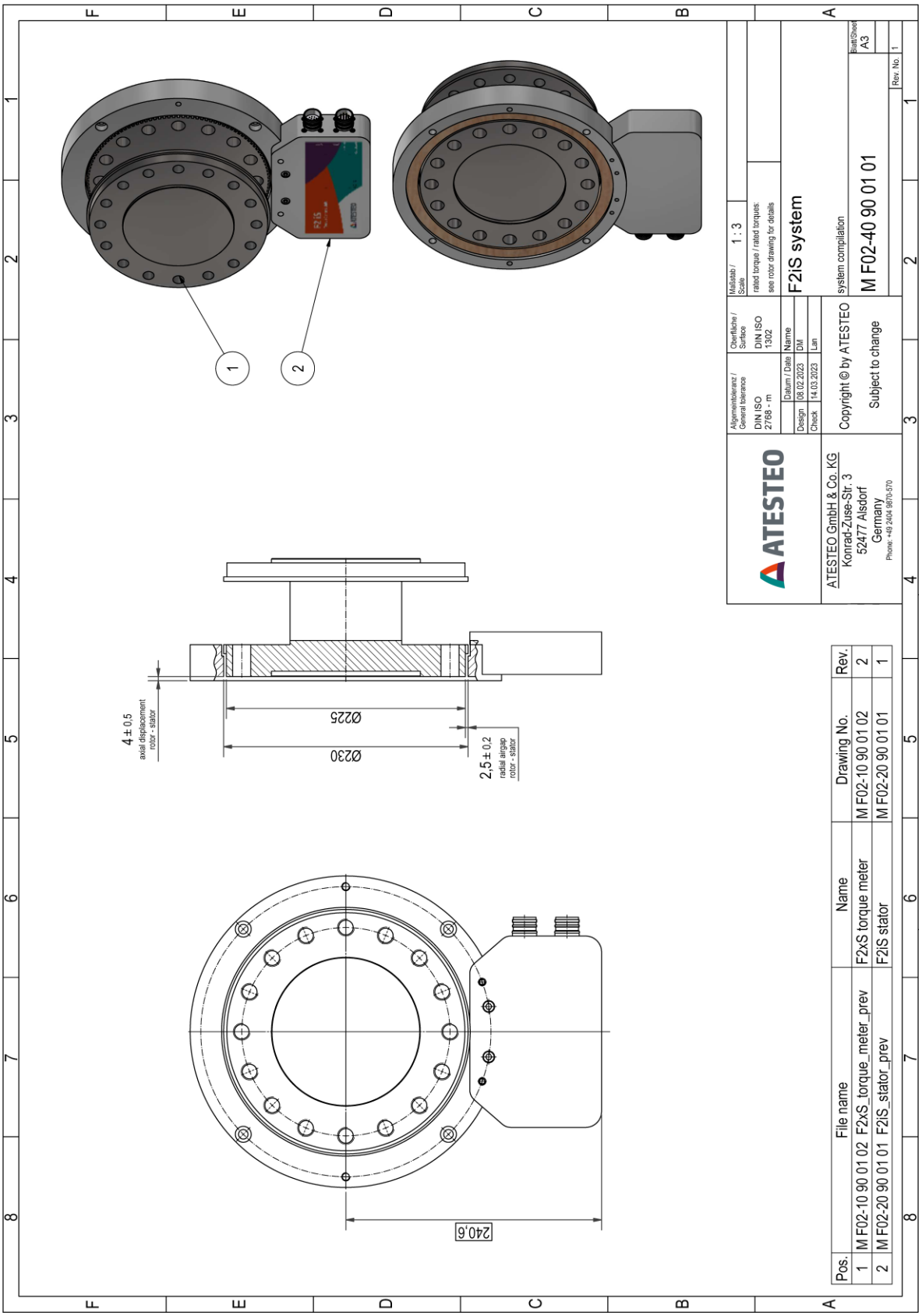


©2023, ATESTEO GmbH & Co. KG, This product data sheet was created on 06.20.2023.

The information contained in the product data sheet corresponds to the status quo at the time the document was created. ATESTEO continually further develops its products and reserves the right to make changes to the technical data. ATESTEO does not accept any liability for consequential losses arising from the use of this product data sheet or the information contained therein.

# F2iS (<=15kNm) Rotor

## Drawing

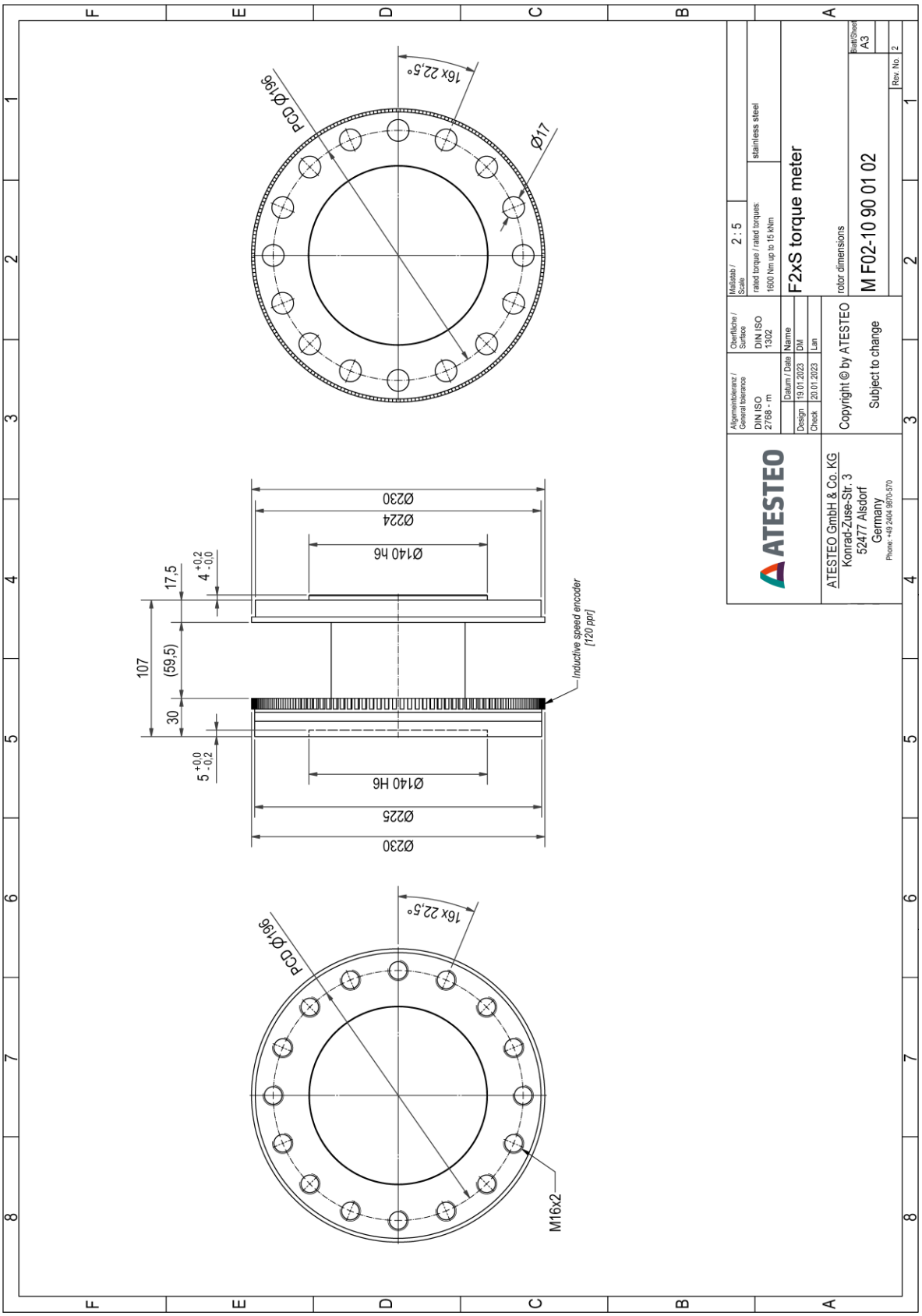


©2023, ATESTEO GmbH & Co. KG, This product data sheet was created on 06.20.2023.

The information contained in the product data sheet corresponds to the status quo at the time the document was created. ATESTEO continually further develops its products and reserves the right to make changes to the technical data. ATESTEO does not accept any liability for consequential losses arising from the use of this product data sheet or the information contained therein.

## Drawing

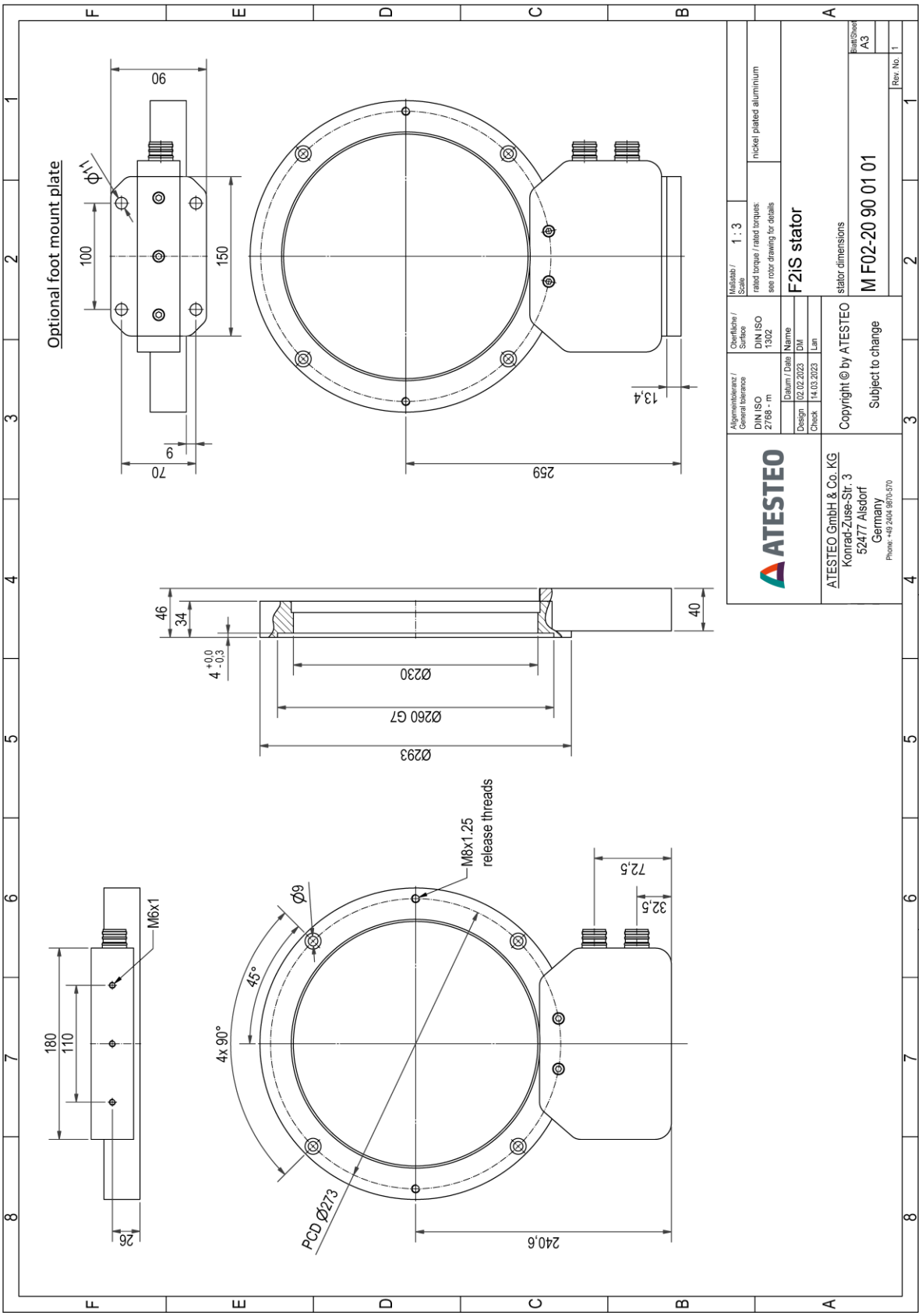


©2023, ATESTEO GmbH & Co. KG, This product data sheet was created on 06.20.2023.

The information contained in the product data sheet corresponds to the status quo at the time the document was created. ATESTEO continually further develops its products and reserves the right to make changes to the technical data. ATESTEO does not accept any liability for consequential losses arising from the use of this product data sheet or the information contained therein.

# F2iS SPD_MGN (<=15kNm) System

## Drawing

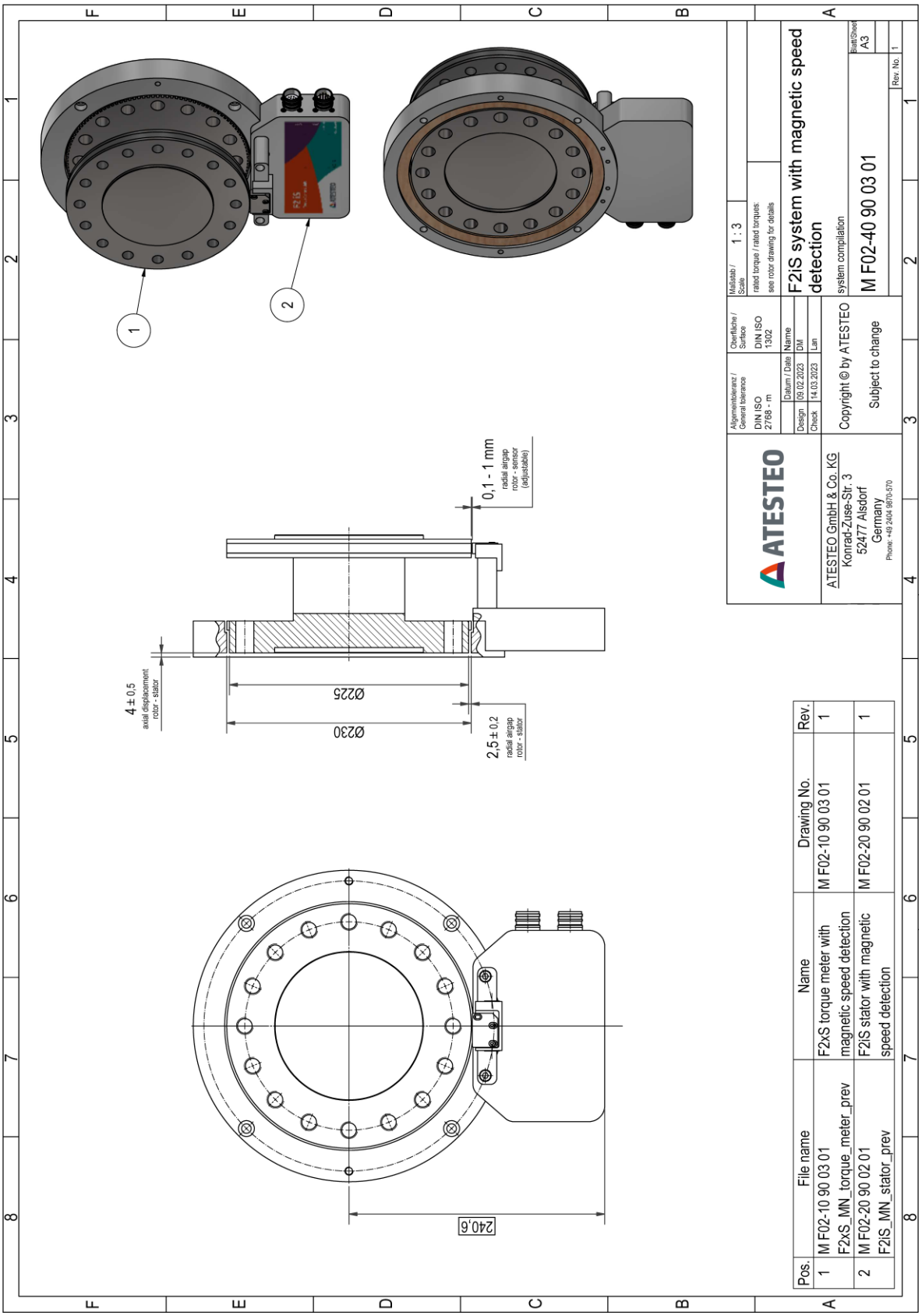


©2023, ATESTEO GmbH & Co. KG, This product data sheet was created on 06.20.2023.

The information contained in the product data sheet corresponds to the status quo at the time the document was created. ATESTEO continually further develops its products and reserves the right to make changes to the technical data. ATESTEO does not accept any liability for consequential losses arising from the use of this product data sheet or the information contained therein.

# F2iS SPD_MGN (<=15kNm) Rotor

## Drawing

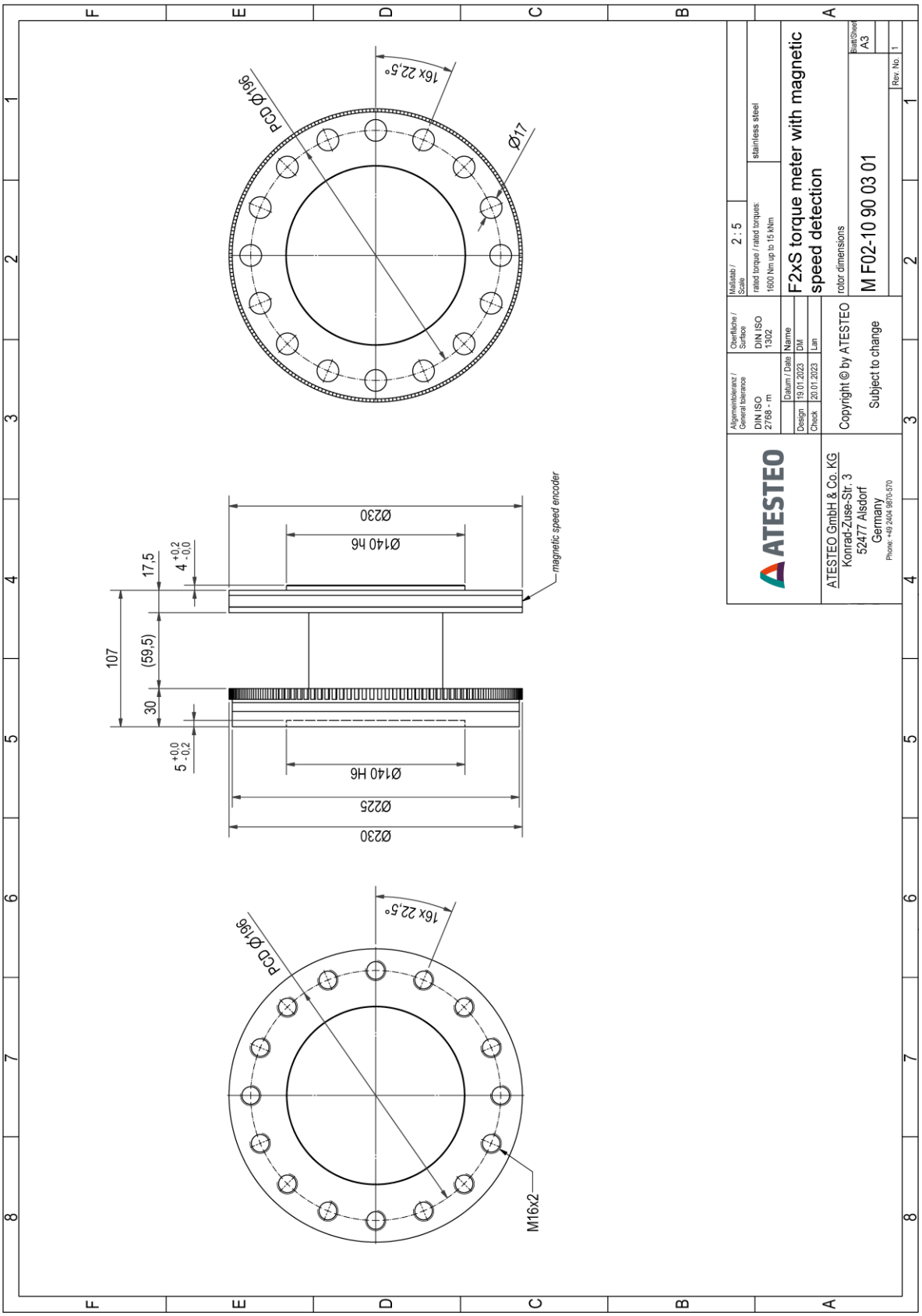


©2023, ATESTEO GmbH & Co. KG, This product data sheet was created on 06.20.2023.

The information contained in the product data sheet corresponds to the status quo at the time the document was created. ATESTEO continually further develops its products and reserves the right to make changes to the technical data. ATESTEO does not accept any liability for consequential losses arising from the use of this product data sheet or the information contained therein.

# F2iS Stator SPD_MGN

## Drawing

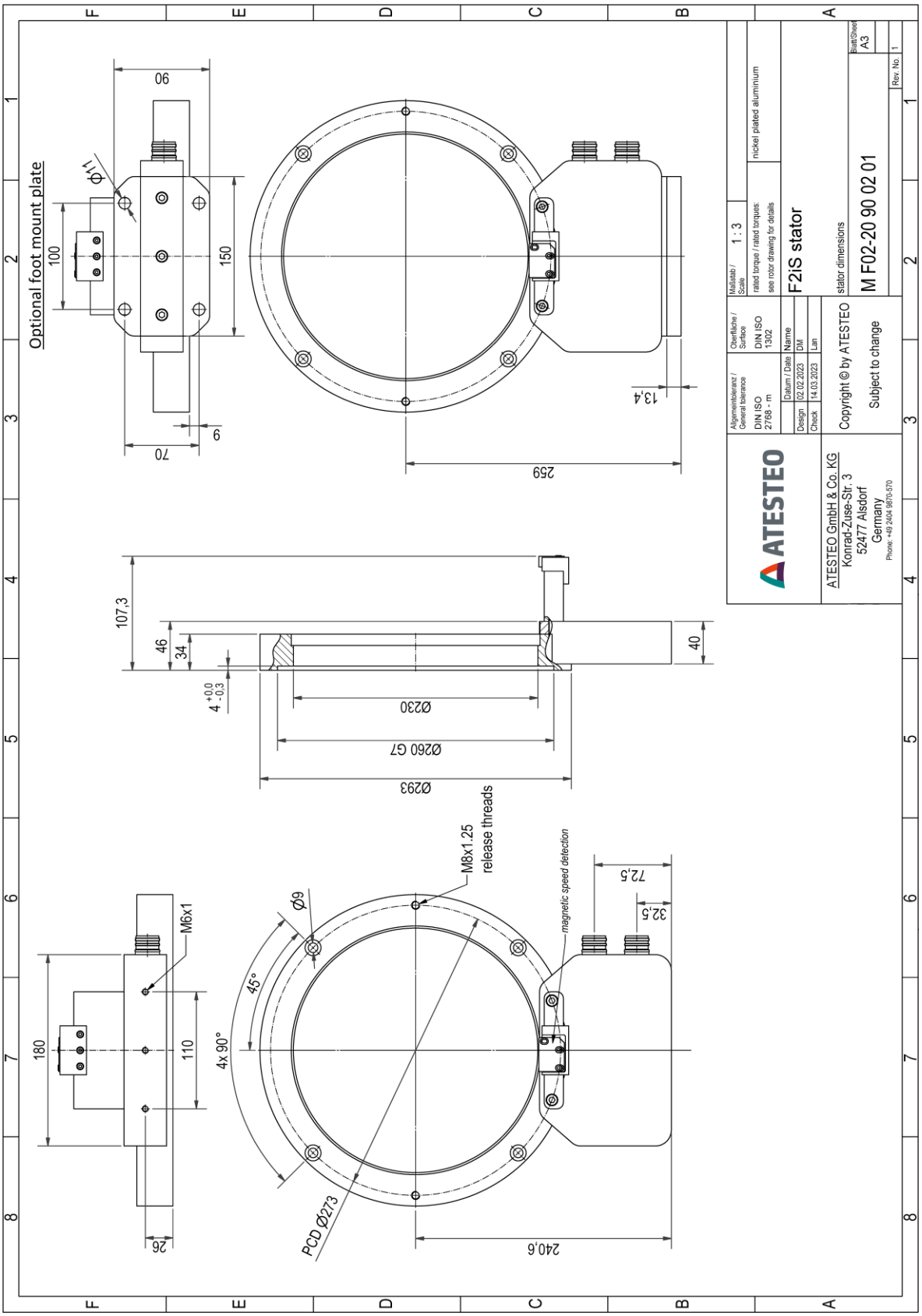


©2023, ATESTEO GmbH & Co. KG, This product data sheet was created on 06.20.2023.

The information contained in the product data sheet corresponds to the status quo at the time the document was created. ATESTEO continually further develops its products and reserves the right to make changes to the technical data. ATESTEO does not accept any liability for consequential losses arising from the use of this product data sheet or the information contained therein.

# F2iS (>15kNm) System

## Drawing

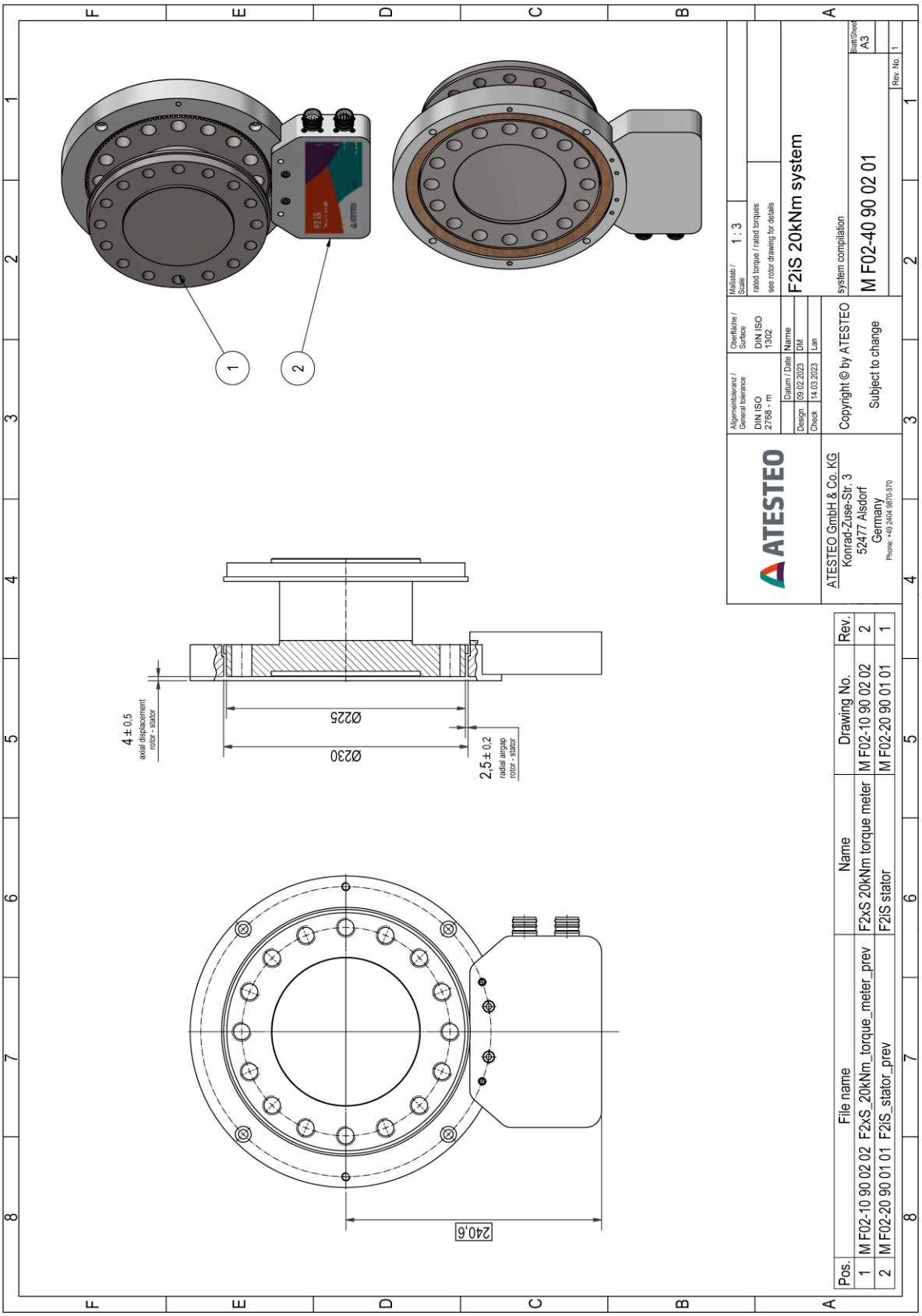


©2023, ATESTEO GmbH & Co. KG, This product data sheet was created on 06.20.2023.

The information contained in the product data sheet corresponds to the status quo at the time the document was created. ATESTEO continually further develops its products and reserves the right to make changes to the technical data. ATESTEO does not accept any liability for consequential losses arising from the use of this product data sheet or the information contained therein.

# F2iS (>15kNm) Rotor

## Drawing

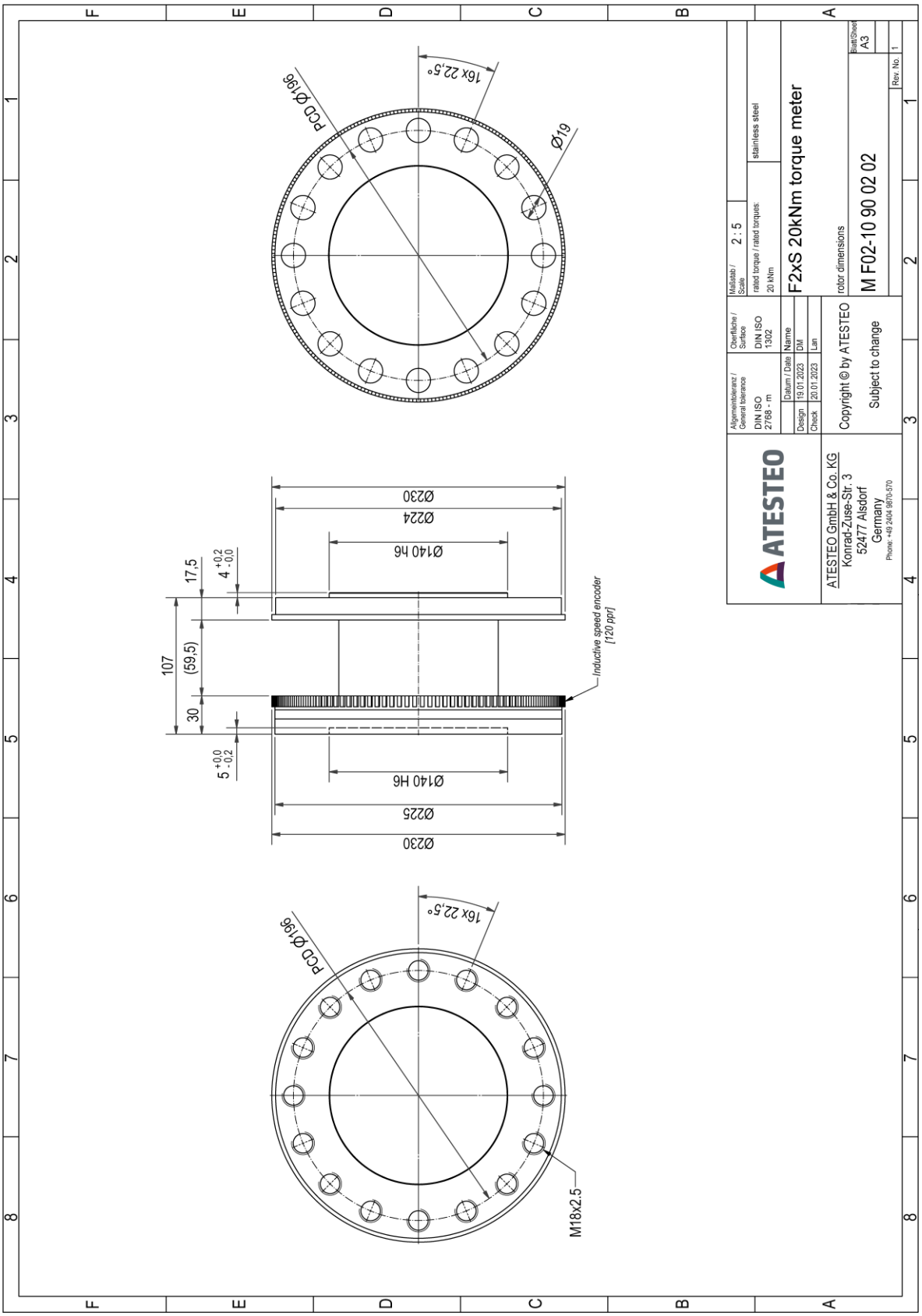


©2023, ATESTEO GmbH & Co. KG, This product data sheet was created on 06.20.2023.

The information contained in the product data sheet corresponds to the status quo at the time the document was created. ATESTEO continually further develops its products and reserves the right to make changes to the technical data. ATESTEO does not accept any liability for consequential losses arising from the use of this product data sheet or the information contained therein.

# F2iS SPD_MGN (>15kNm) System

## Drawing

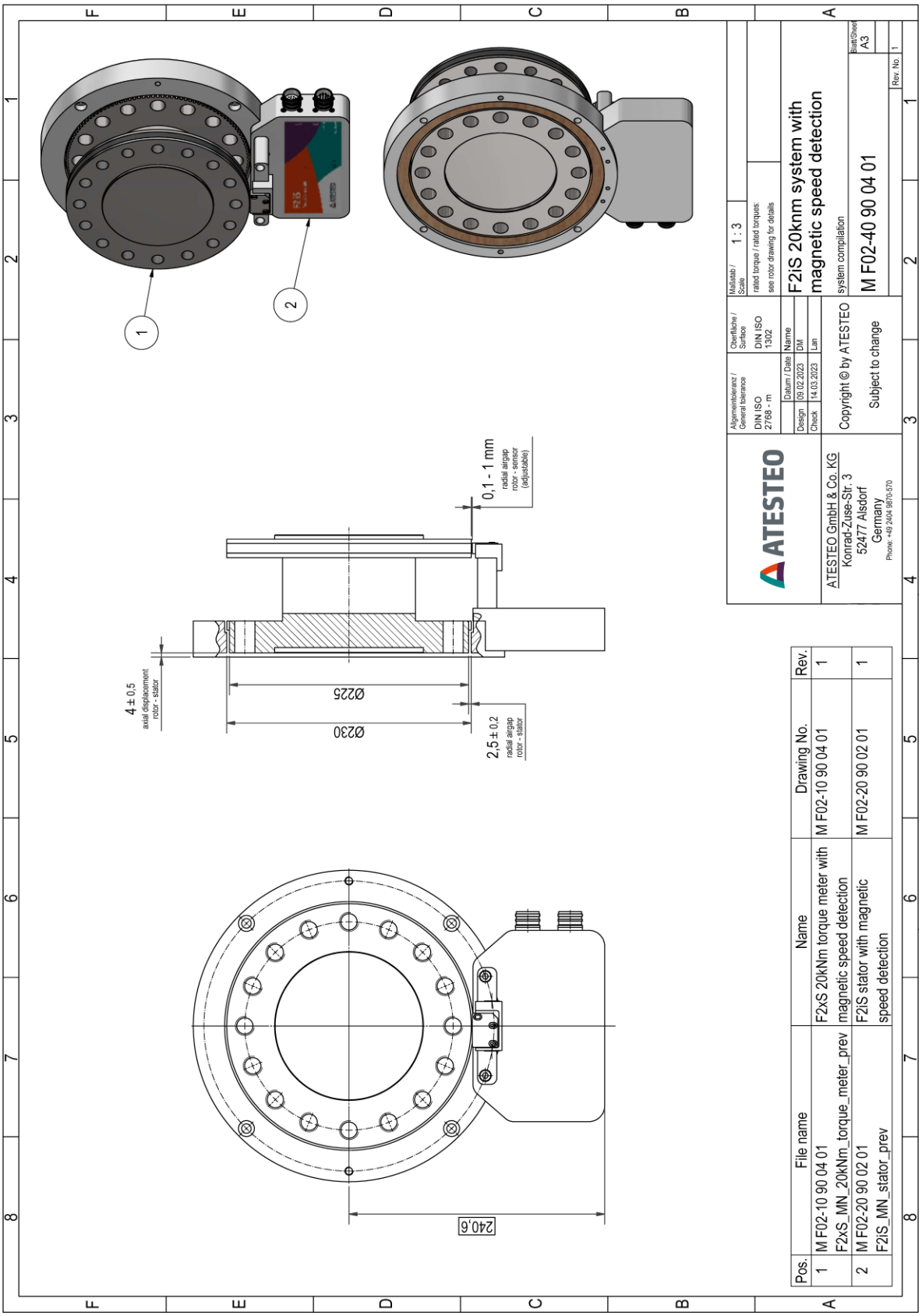


©2023, ATESTEO GmbH & Co. KG, This product data sheet was created on 06.20.2023.

The information contained in the product data sheet corresponds to the status quo at the time the document was created. ATESTEO continually further develops its products and reserves the right to make changes to the technical data. ATESTEO does not accept any liability for consequential losses arising from the use of this product data sheet or the information contained therein.

# F2iS SPD_MGN (>15kNm) Rotor

## Drawing

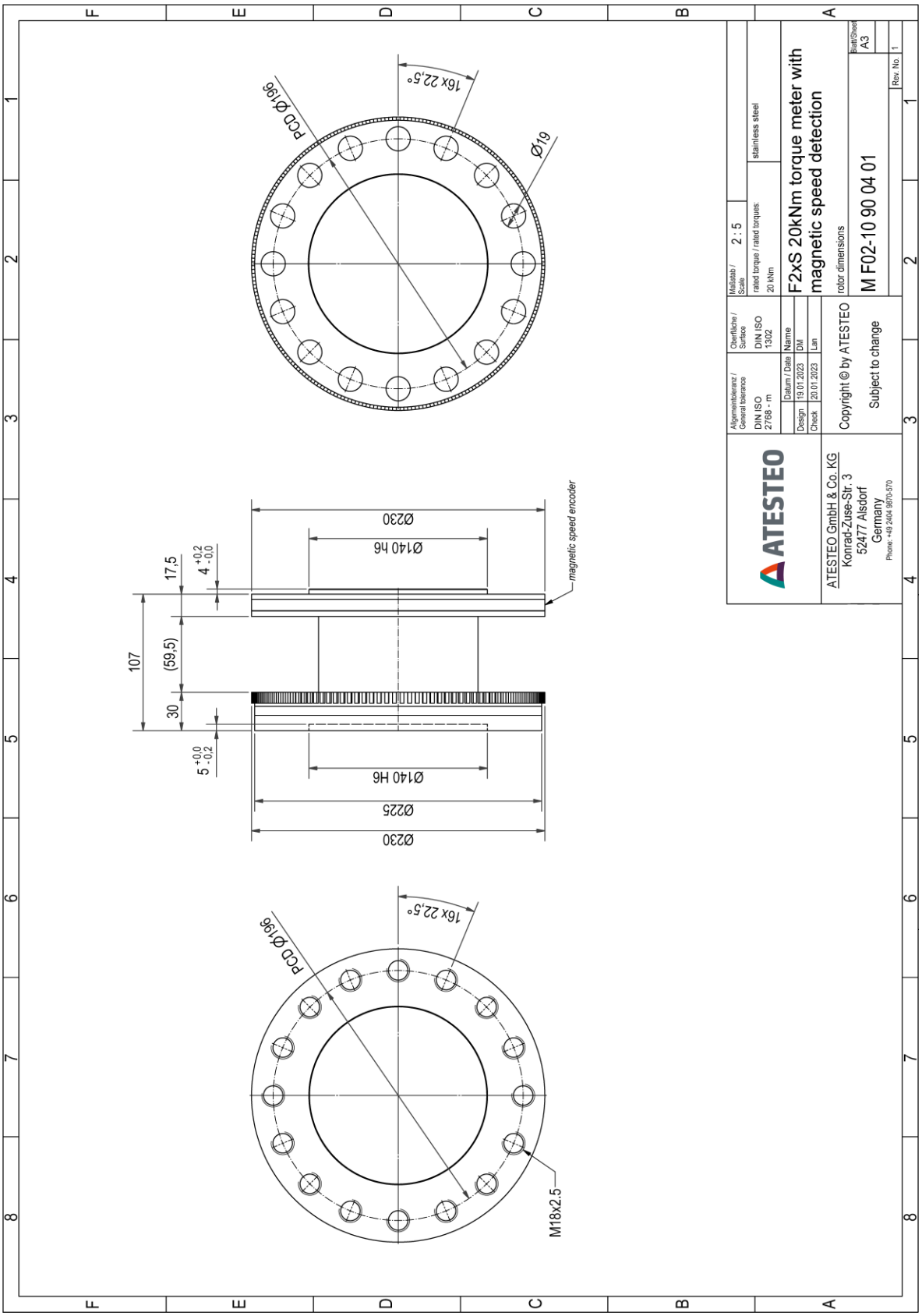


©2023, ATESTEO GmbH & Co. KG, This product data sheet was created on 06.20.2023.

The information contained in the product data sheet corresponds to the status quo at the time the document was created. ATESTEO continually further develops its products and reserves the right to make changes to the technical data. ATESTEO does not accept any liability for consequential losses arising from the use of this product data sheet or the information contained therein.

## Drawing

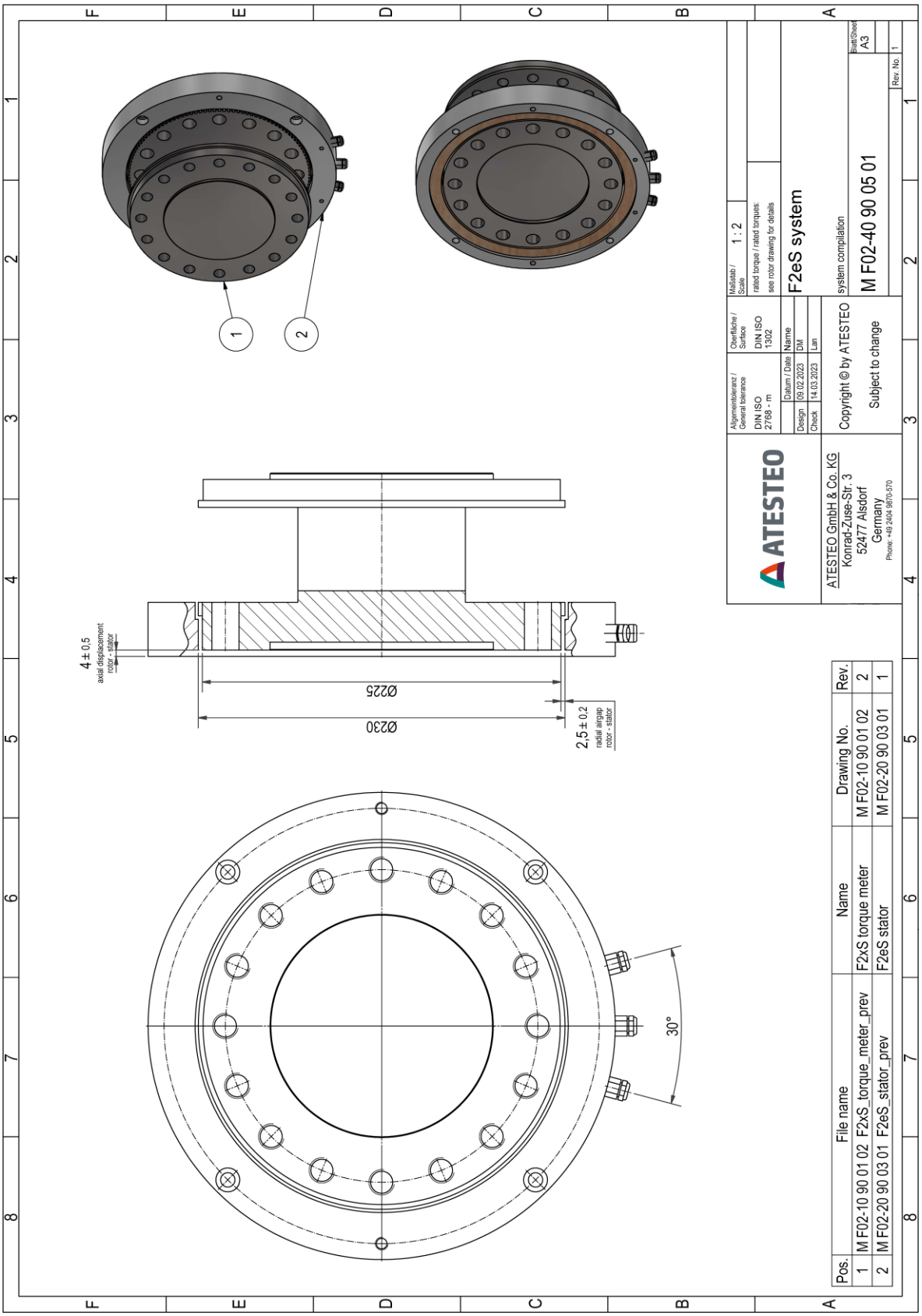


©2023, ATESTEO GmbH & Co. KG, This product data sheet was created on 06.20.2023.

The information contained in the product data sheet corresponds to the status quo at the time the document was created. ATESTEO continually further develops its products and reserves the right to make changes to the technical data. ATESTEO does not accept any liability for consequential losses arising from the use of this product data sheet or the information contained therein.

# F2eS (<=15kNm) Rotor

## Drawing

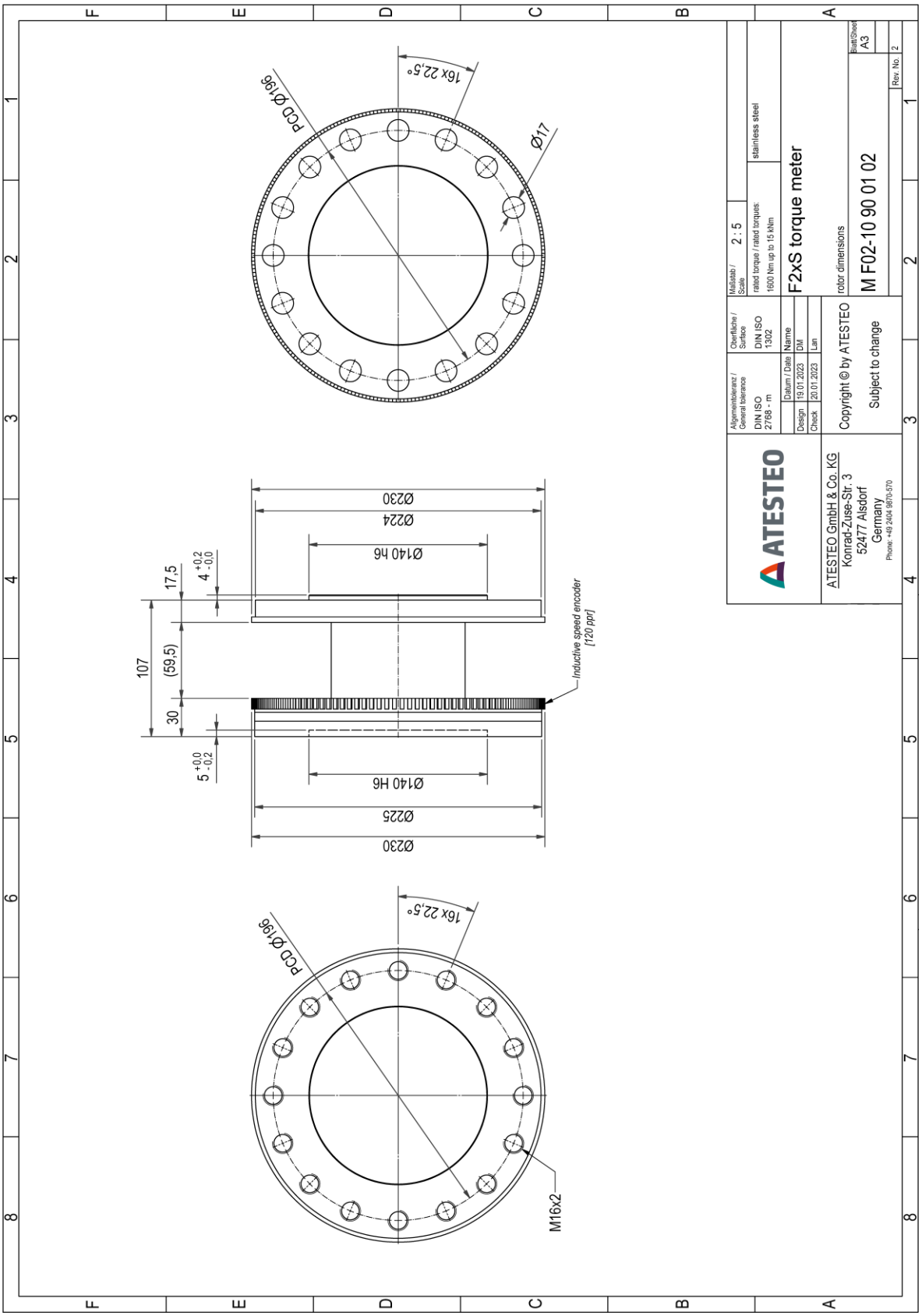


©2023, ATESTEO GmbH & Co. KG, This product data sheet was created on 06.20.2023.

The information contained in the product data sheet corresponds to the status quo at the time the document was created. ATESTEO continually further develops its products and reserves the right to make changes to the technical data. ATESTEO does not accept any liability for consequential losses arising from the use of this product data sheet or the information contained therein.

## Drawing

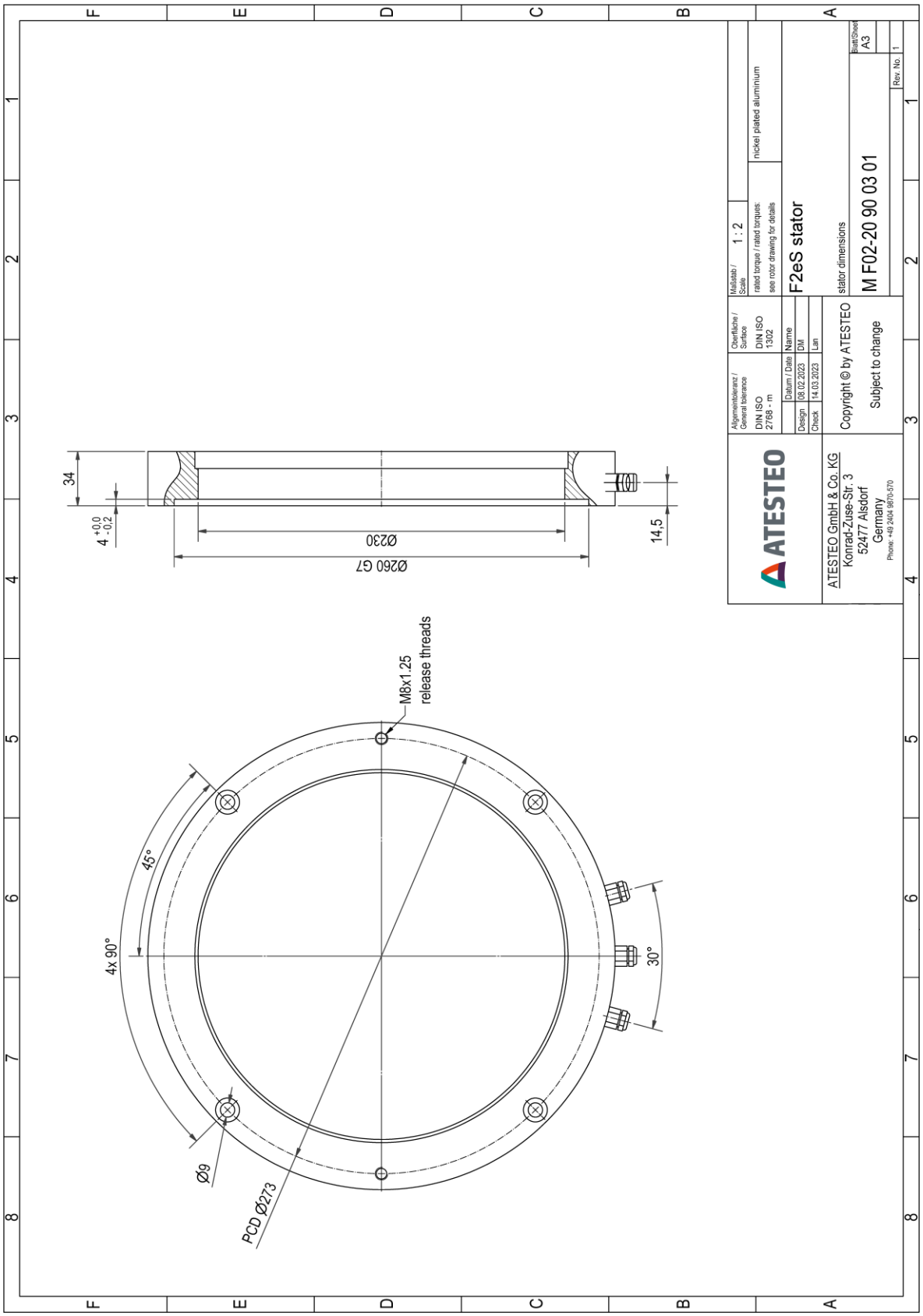


©2023, ATESTEO GmbH & Co. KG, This product data sheet was created on 06.20.2023.

The information contained in the product data sheet corresponds to the status quo at the time the document was created. ATESTEO continually further develops its products and reserves the right to make changes to the technical data. ATESTEO does not accept any liability for consequential losses arising from the use of this product data sheet or the information contained therein.

# F2eS SPD_MGN (<=15kNm) System

## Drawing

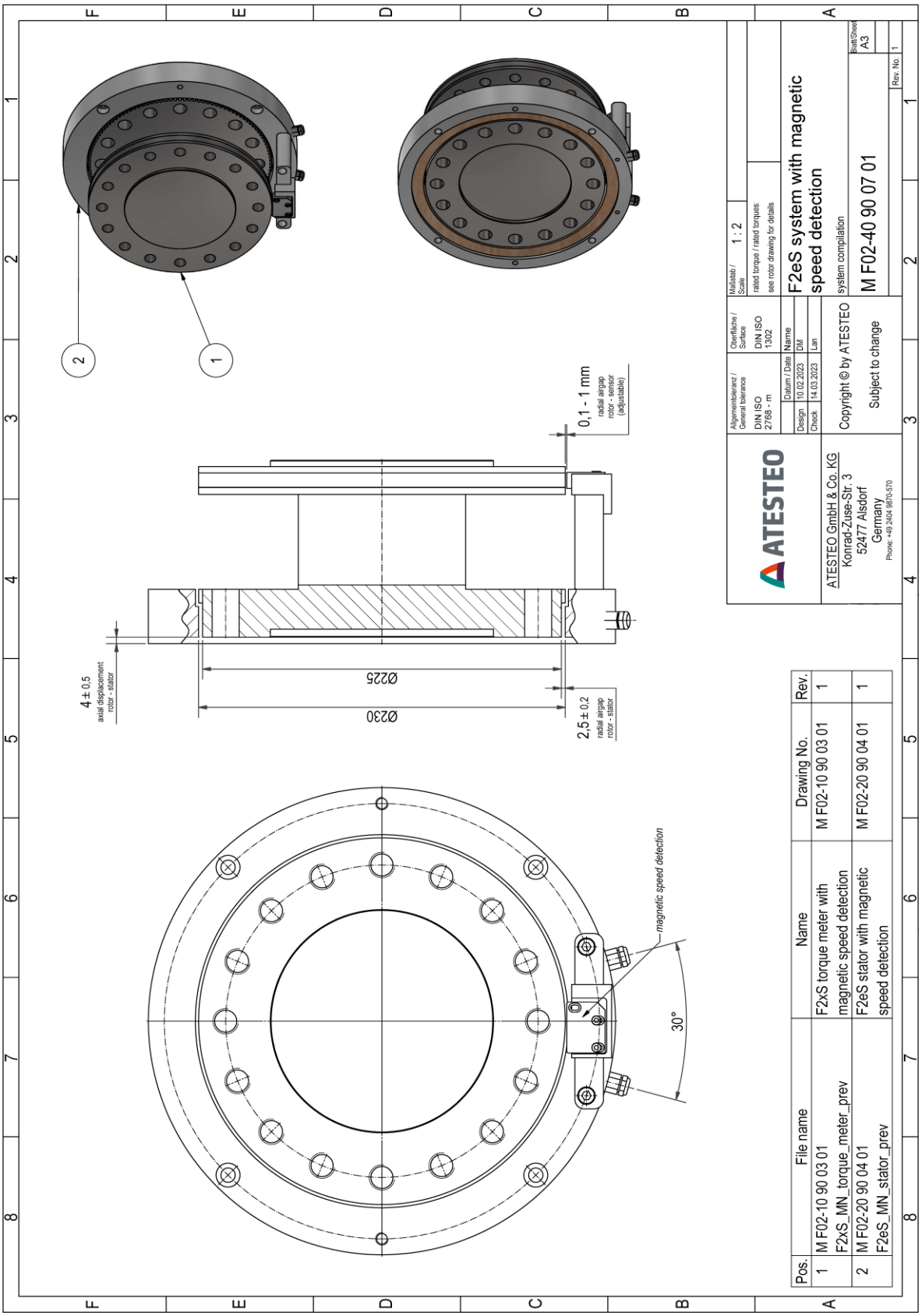


©2023, ATESTEO GmbH & Co. KG, This product data sheet was created on 06.20.2023.

The information contained in the product data sheet corresponds to the status quo at the time the document was created. ATESTEO continually further develops its products and reserves the right to make changes to the technical data. ATESTEO does not accept any liability for consequential losses arising from the use of this product data sheet or the information contained therein.

# F2eS SPD_MGN (<=15kNm) Rotor

## Drawing

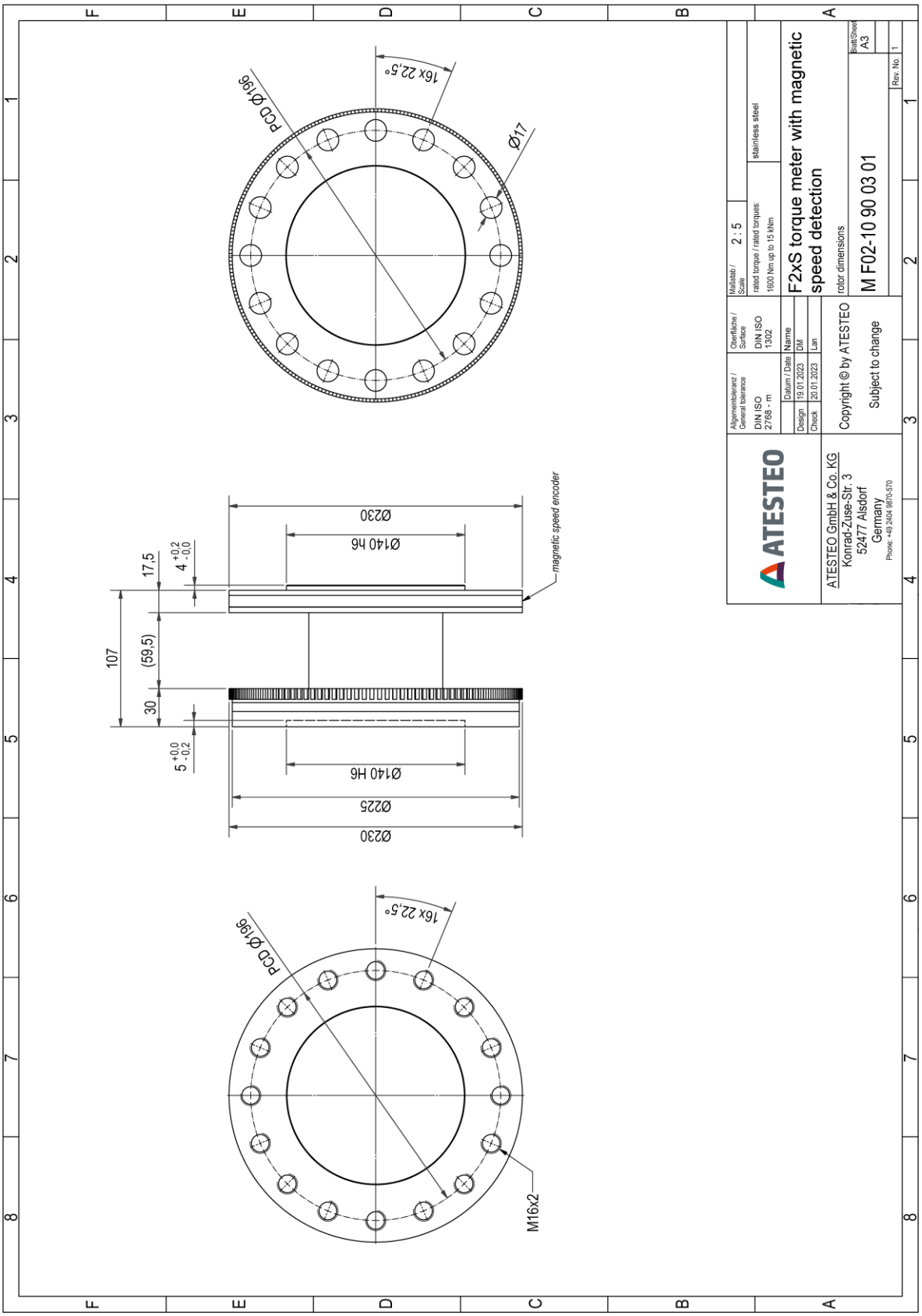


©2023, ATESTEO GmbH & Co. KG, This product data sheet was created on 06.20.2023.

The information contained in the product data sheet corresponds to the status quo at the time the document was created. ATESTEO continually further develops its products and reserves the right to make changes to the technical data. ATESTEO does not accept any liability for consequential losses arising from the use of this product data sheet or the information contained therein.

## Drawing

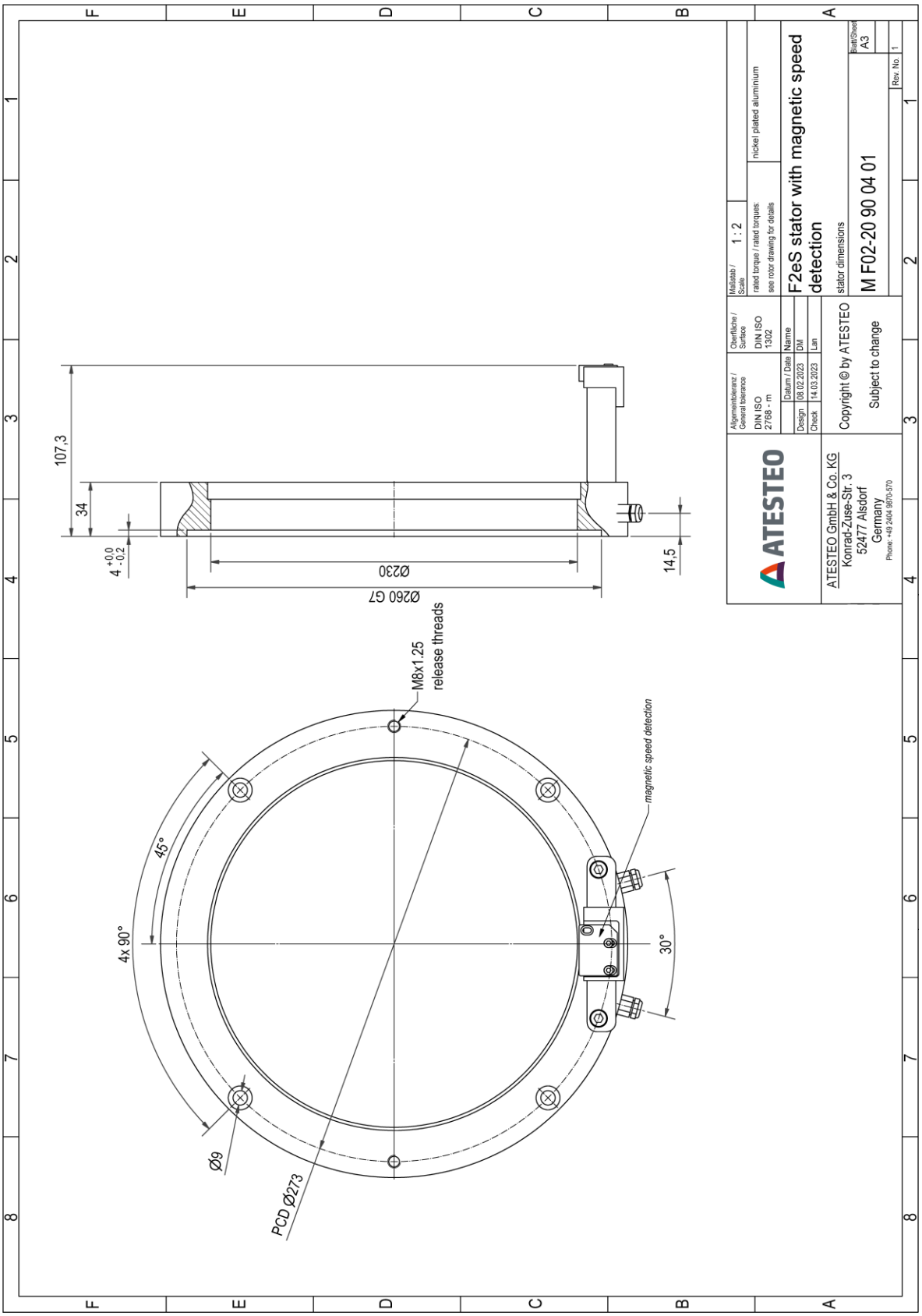


©2023, ATESTEO GmbH & Co. KG, This product data sheet was created on 06.20.2023.

The information contained in the product data sheet corresponds to the status quo at the time the document was created. ATESTEO continually further develops its products and reserves the right to make changes to the technical data. ATESTEO does not accept any liability for consequential losses arising from the use of this product data sheet or the information contained therein.

# F2iS (>15kNm) System

## Drawing

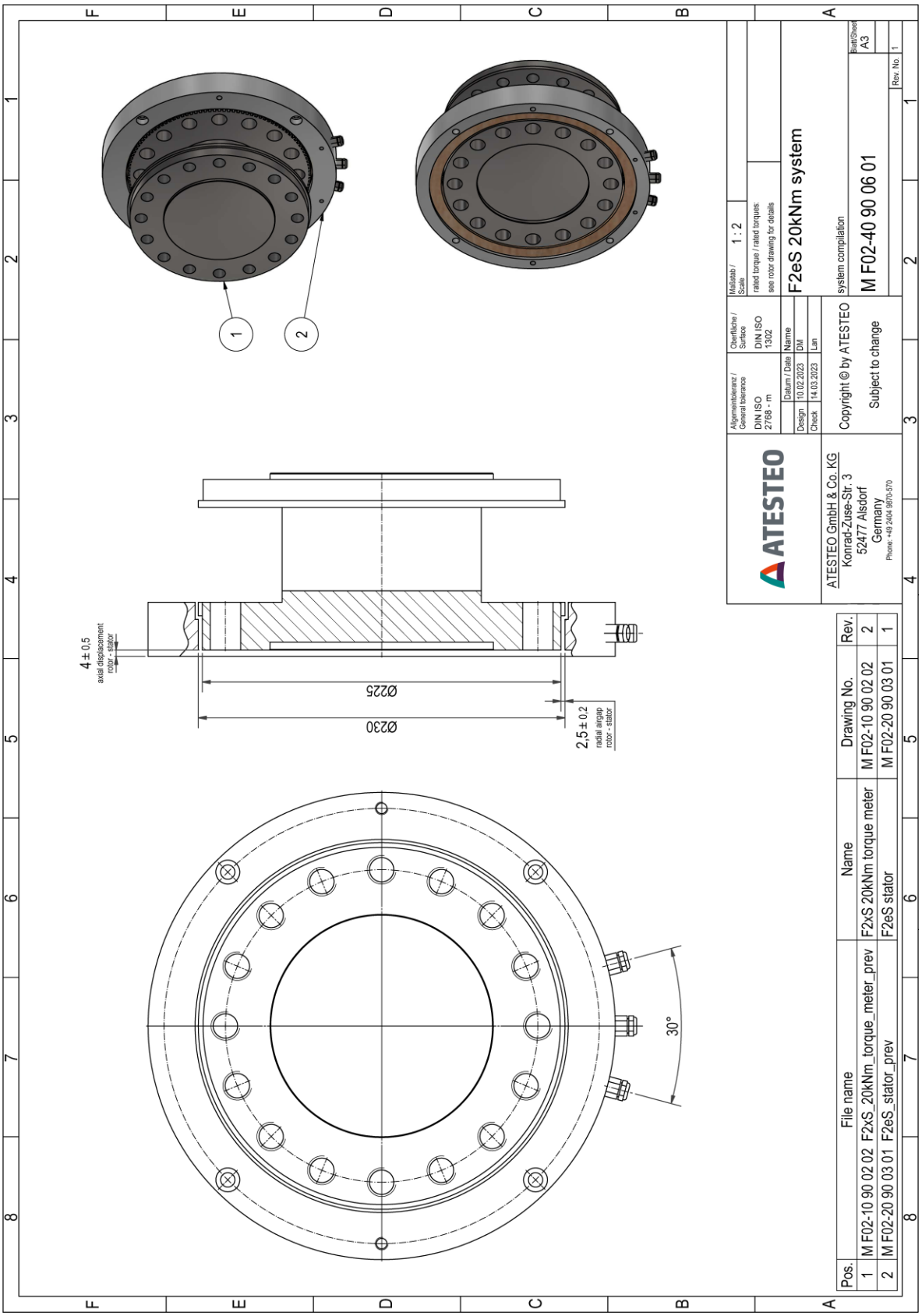


©2023, ATESTEO GmbH & Co. KG, This product data sheet was created on 06.20.2023.

The information contained in the product data sheet corresponds to the status quo at the time the document was created. ATESTEO continually further develops its products and reserves the right to make changes to the technical data. ATESTEO does not accept any liability for consequential losses arising from the use of this product data sheet or the information contained therein.

# F2iS (>15kNm) Rotor

## Drawing

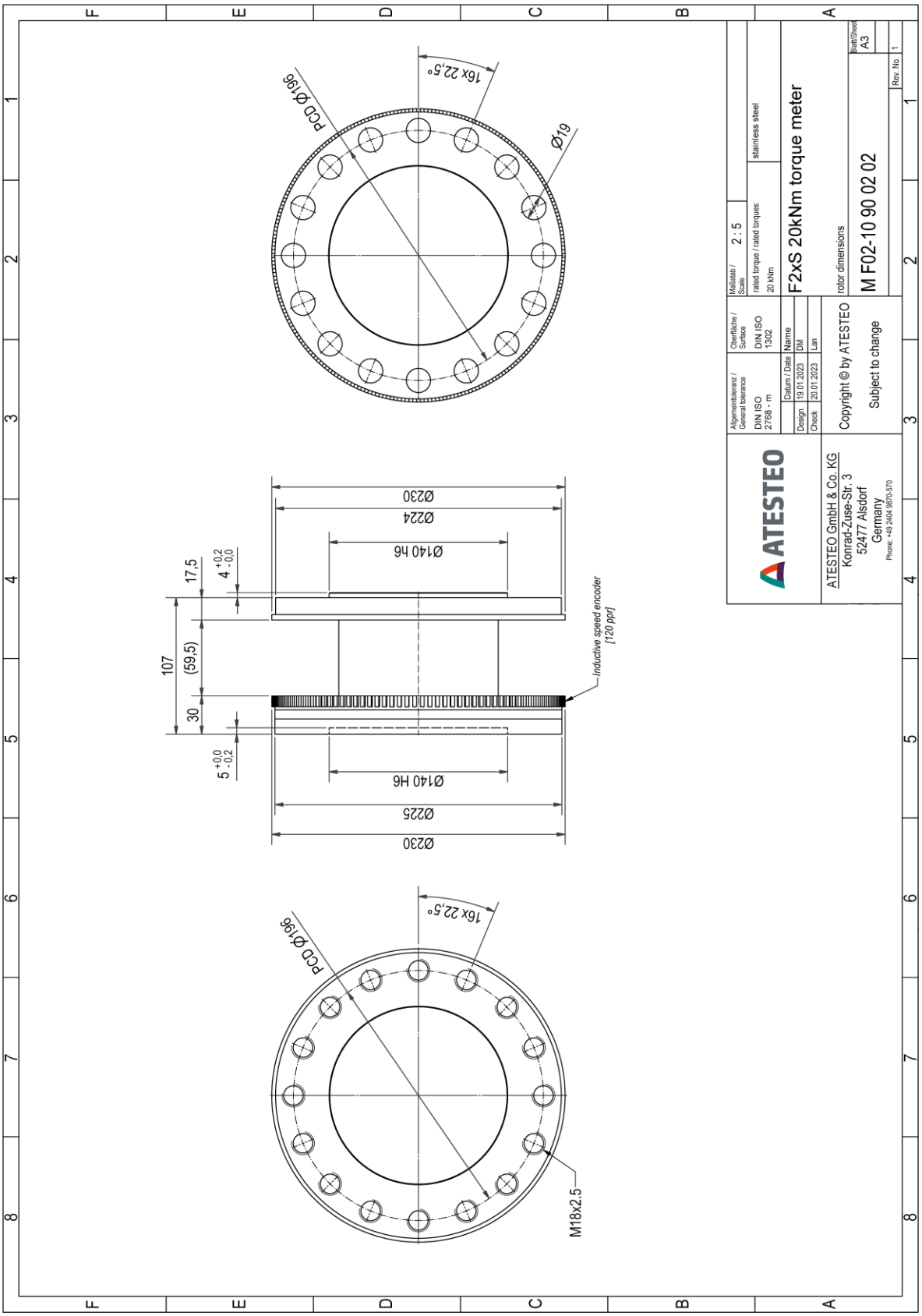


©2023, ATESTEO GmbH & Co. KG, This product data sheet was created on 06.20.2023.

The information contained in the product data sheet corresponds to the status quo at the time the document was created. ATESTEO continually further develops its products and reserves the right to make changes to the technical data. ATESTEO does not accept any liability for consequential losses arising from the use of this product data sheet or the information contained therein.

# F2iS SPD_MGN (>15kNm) System

## Drawing

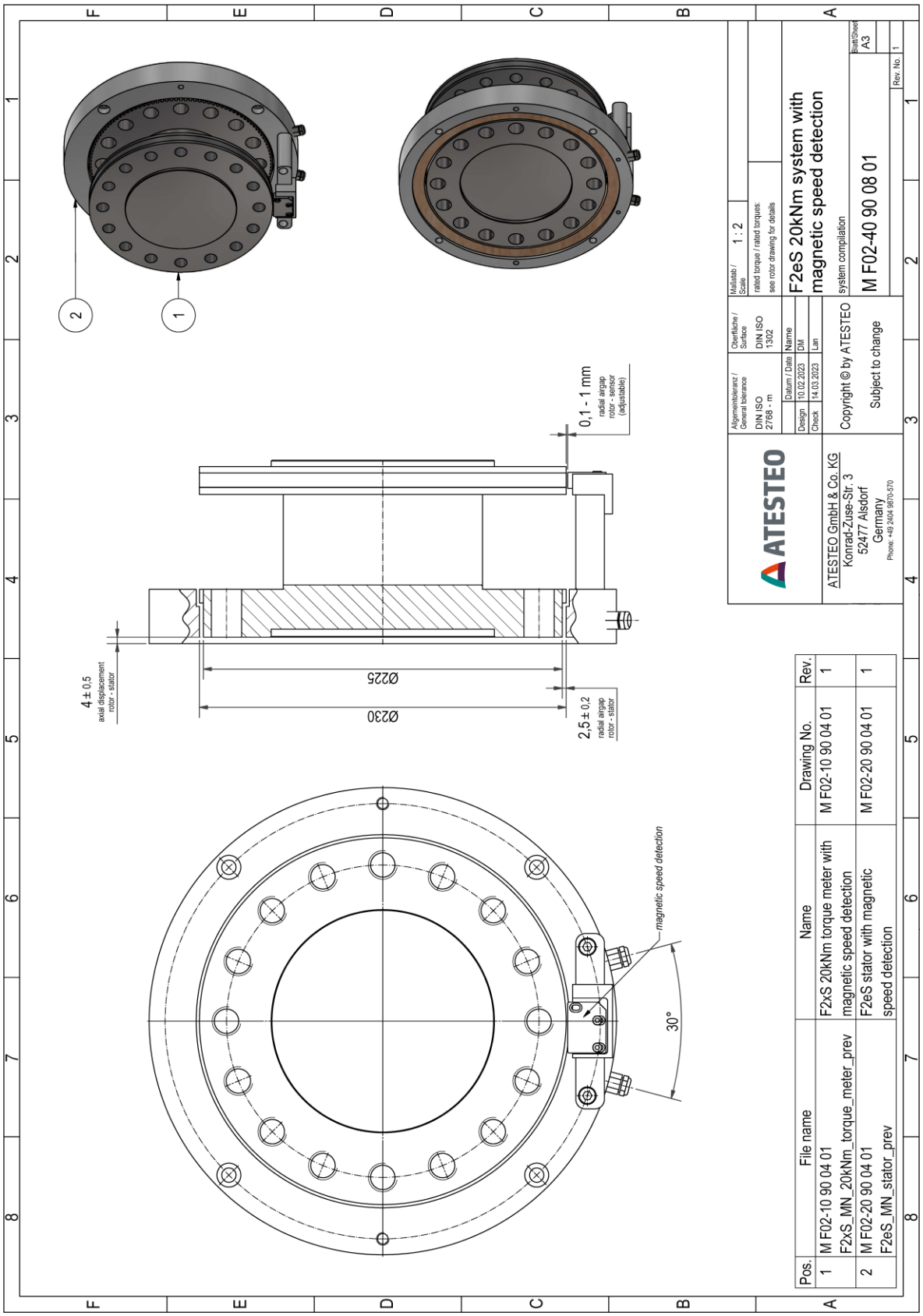


©2023, ATESTEO GmbH & Co. KG, This product data sheet was created on 06.20.2023.

The information contained in the product data sheet corresponds to the status quo at the time the document was created. ATESTEO continually further develops its products and reserves the right to make changes to the technical data. ATESTEO does not accept any liability for consequential losses arising from the use of this product data sheet or the information contained therein.

# F2iS SPD_MGN (>15kNm) Rotor

## Drawing

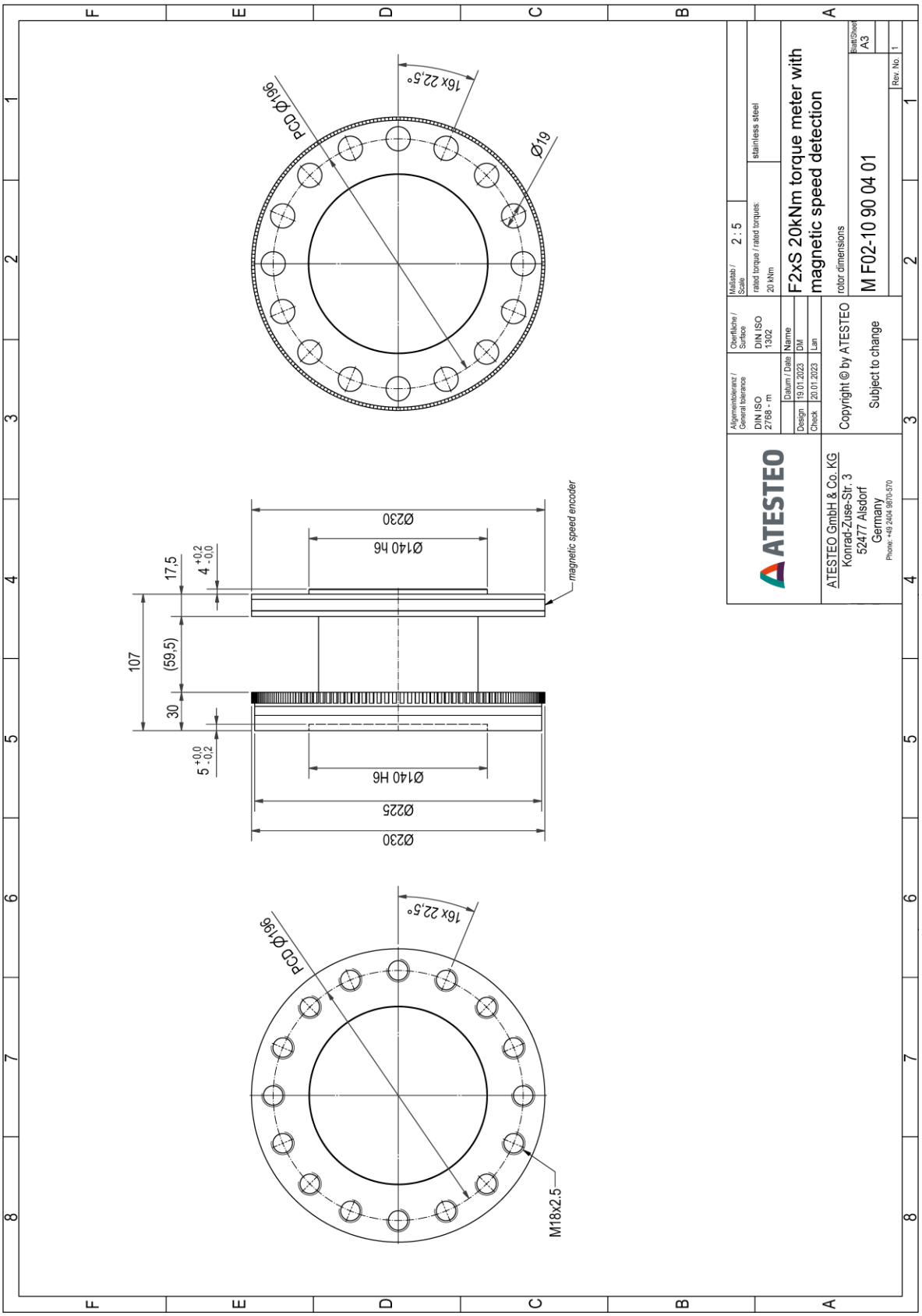


©2023, ATESTEO GmbH & Co. KG, This product data sheet was created on 06.20.2023.

The information contained in the product data sheet corresponds to the status quo at the time the document was created. ATESTEO continually further develops its products and reserves the right to make changes to the technical data. ATESTEO does not accept any liability for consequential losses arising from the use of this product data sheet or the information contained therein.

## Drawing

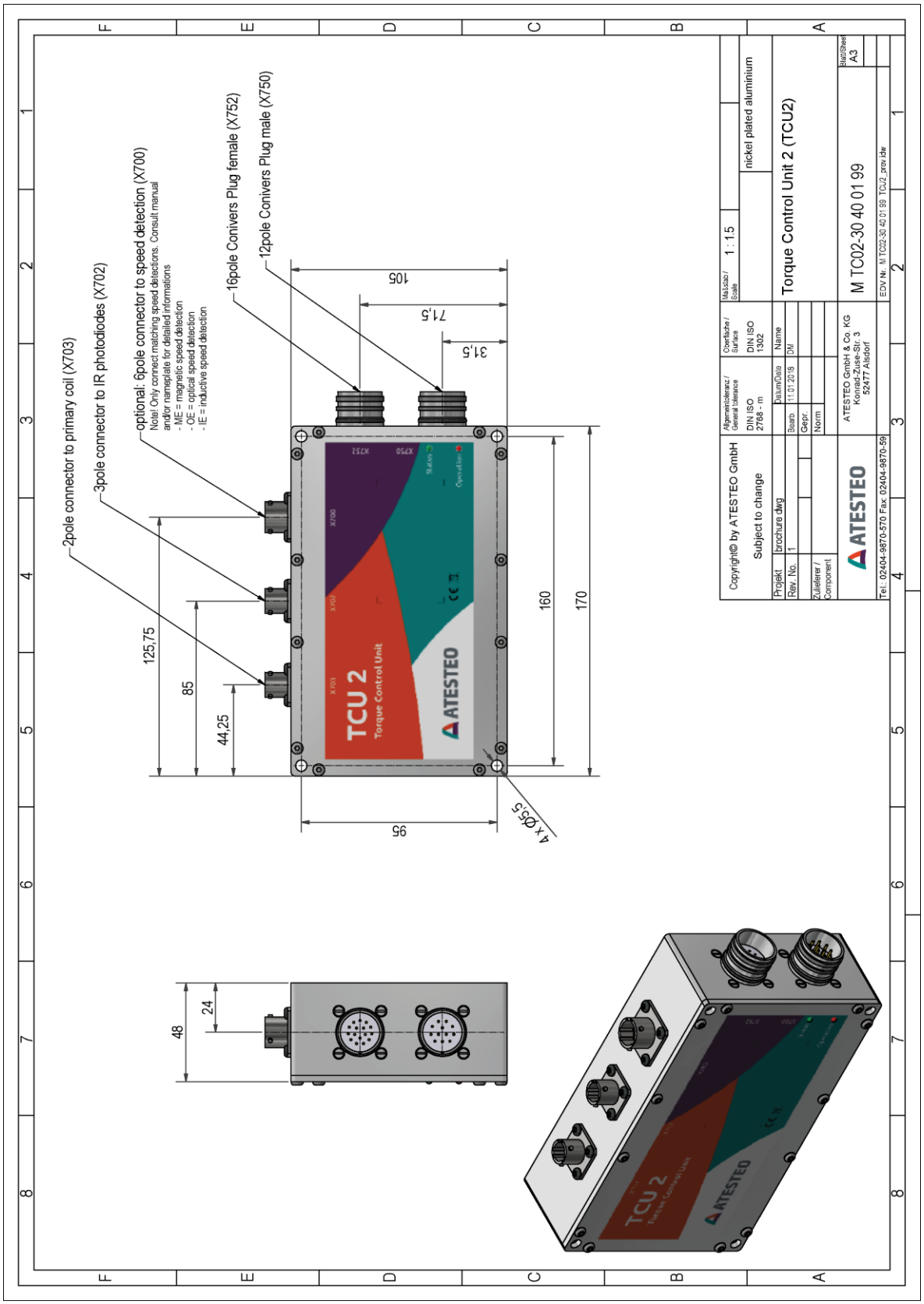


©2023, ATESTEO GmbH & Co. KG, This product data sheet was created on 06.20.2023.

The information contained in the product data sheet corresponds to the status quo at the time the document was created. ATESTEO continually further develops its products and reserves the right to make changes to the technical data. ATESTEO does not accept any liability for consequential losses arising from the use of this product data sheet or the information contained therein.

ATESTEO
Excellence in drivetrain testing

**Would you like to learn more about our products, solutions, and services in the area of measuring systems, vehicle equipment, and actuators? Just call us at +49 (0) 2404 9870 570 or send email to equipment@atesteo.com. Your personal ATESTEO contact would be pleased to assist you.**

TÜV SÜD

DAkkS Deutsche Akkreditierungsstelle

ATESTEO GmbH & Co. KG
Konrad-Zuse-Straße 3
52477 Alsdorf
Germany

Phone +49 (0) 2404 9870 - 0
Email info@atesteo.com

Instrumentation Devices

Instrumentation Devices Srl
Via Acquanera 29 - 22100 COMO (Italy)
ph +39 031 525 391- fax +39 031 507 984
info@instrumentation.it - www.instrumentation.it